FERMI ENGINEERING SPECIFICATION DOCUMENT
N. 084

TITLE
"TECHNICAL SPECIFICATIONS FOR THE L00.01 AND L00.02 ACCELERATING STRUCTURES"

AUTHOR
C. SERPICO

Date of Review	04-07-2013
Review Number	4

TABLE OF CONTENTS

TABLE OF CONTENTS 2

1 INTRODUCTION 4
1.1 Introduction to FERMI Project 4
1.2 Scope 4
1.3 Deliverables 4
1.3.1 Accelerating Structures 4
1.3.2 Reports and documentation 5
1.4 Timescales 5

2 GENERAL CONDITIONS OF THE CONTRACT 6
2.1 Contractor's responsibilities 6
2.2 Contract management 6
2.2.1 Contract engineer 6
2.2.2 Work programme and progress report 6
2.2.3 Inspections 7
2.3 Technical and Progress Meeting 7
2.3.1 Kick off meeting 7
2.3.2 Preliminary Design Review (PDR) 7
2.3.3 Final Design Review (FDR) 7
2.4 Production control 8
2.5 Handling, transport and storage 8

3 TECHNICAL REQUIREMENTS FOR ACCELERATING STRUCTURES AND WAVEGUIDE COMPONENTS 9
3.1 Accelerating sections L00.01 and L00.02 9
3.1.1 RF performances 9
3.1.2 Vacuum system requirements 10
3.1.3 Cooling circuits 10
3.1.4 Dimensional requirements and tolerances 11
3.2 Waveguide components 11
3.2.1 RF performances 12
3.2.2 Vacuum requirements 13
3.2.3 Cooling circuits 13
3.2.4 Dimensional requirements and tolerances 13
3.3 Waveguide input assemblies and connection to the sections 13
3.4 Design and manufacturing criteria 14
3.5 Materials 14
3.5.1 OHFC grade copper 14
3.5.1.1 Chemical composition 14
3.5.1.2 Structure 15
3.5.1.3 Inclusions 15
3.5.1.4 Mechanical 15
3.5.1.5 Electrical (as per ASTM B193) 15
3.6 Interfaces 15

4 TECHNICAL REQUIREMENTS FOR ACCELERATING STRUCTURE'S SOLENOID 16

5 TECHNICAL REQUIREMENTS FOR SUPPORT GIRDERS 17
5.1 General description 17
5.2 The girder 17
5.3 Adjustable feet 18
5.4 Adjustable supports 19
5.5 Reference points 19
5.6 Beam height and overall dimensions 20

6 FACTORY AND SITE ACCEPTANCE TESTS 22
6.1 Mechanical and RF tests 22
6.1.1 Mechanical survey and RF measurements of power splitters and H-type 180° bends 22
6.1.2 Mechanical survey and RF measurements of waveguide assemblies 22
6.1.3 Cold RF measurements of accelerating sections 23
6.2 Accelerating module tests 23
6.3 Solenoid magnetic measurements 24
6.4 Vacuum tests 24
6.4.1 Accelerating structures 24
6.4.2 Waveguide components 25
6.5 Cooling circuits' tests 25
6.5.1 Accelerating structures and waveguides 25
6.5.2 Solenoid 25
6.6 High power tests 25

1 INTRODUCTION

1.1 Introduction to FERMI Project

Elettra - Sincrotrone Trieste S.C.p.A. (hereinafter referred to by the word "Elettra") is a joint-stock consortium company of national interest which currently manages the Elettra multidisciplinary laboratory, based on a third-generation synchrotron light source. Currently, Elettra is creating a new, fourth-generation source, the FERMI free-electron laser. Both sources are equipped with special beamlines that can be used by national and international users in order to carry out various types of experiments of considerable complexity and scientific value. The high quality of the sources and beamlines have produced significant results, both scientific and technological.

FERMI is a single-pass Free Electron Laser (FEL) user facility covering the spectral range 100-4 nm. In the photo-injector region, the bunched beam is generated and accelerated up to nominal energy of 100MeV with a 50-Hz repetition rate; it is then injected into linac 1 with appropriate emittance, pulse length and energy spread. The photo-injector components include a laser system, a 1.6 cell S-band RF gun, two emittance compensation solenoids, two accelerating structures and a laser heater system. Figure 1 shows a schematic view of the photo-injector where the positions of the RF structures are indicated with L00.01 and L00.02 (Linac 0).

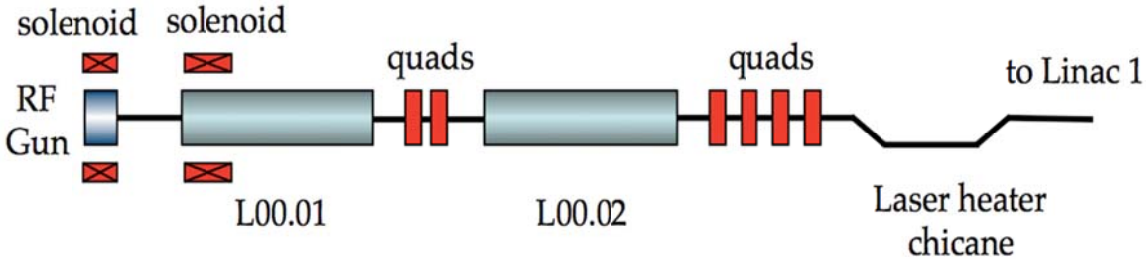

Figure 1. Schematic layout of the 100 MeV photo-injector

1.2 Scope

The scope of the contract is the design, manufacturing, testing and delivery of 2 (two) accelerating modules consisting of:

- S-band forward travelling-wave accelerating structure
- input waveguide assembly
- adjustable support girder

One accelerating structure shall also be equipped with a Solenoid. All the components should be built according to this specification which will be a constituent part of the contract.

1.3 Deliverables

1.3.1 Accelerating Structures

Contractor shall provide 2 (two) accelerating modules:

- The first accelerating module is composed of:

1. n. 1 (one) - Forward travelling wave accelerating structure
2. n. 1 (one) - Solenoid
3. n. 1 (one) - 3dB Power Splitter

4. n. 2 (two) - WR284, H-type, 180 degree bends
5. n. 1 (one) - Adjustable support girder
6. n. 1 (one) - Water-cooling circuit
7. All vacuum pipes and flanges
8. All RF waveguide flanges and blank flanges
9. All other necessary items also if not clearly specified in the above list

- The second accelerating module is composed of:

1. n. 1 (one) - Forward travelling wave accelerating structure
2. n. 1 (one) - 3dB Power Splitter
3. n. 2 (two) - WR284, H-type, 180 degree bends
4. n. 1 (one) - Adjustable support girder
5. n. 1 (one) - Water-cooling circuit
6. All vacuum pipes and flanges
7. All RF waveguide flanges and blank flanges
8. All other necessary items also if not clearly specified in the above list

1.3.2 Reports and documentation

1. Kick-off meeting documentation and minutes (see §2.3.1)
2. Preliminary Design Review documentation and minutes (see §2.3.2)
3. Final Design Review documentation and minutes (see §2.3.3)
4. Monthly reports (see §2.2.2)
5. RF design reports for structures and waveguide assembly
6. Design reports for solenoid, cooling circuit and support
7. Full set of mechanical drawings of waveguides, structures, solenoid and supports
8. All test reports

1.4 Timescales

Following the award of the contract, the design stage shall not exceed 16 (sixteen) weeks. A full design review must take place within this time period. In the event of the design being incomplete after sixteen calendar weeks and extension is not mutually agreed, the contract shall terminate.

Elettra requires the following timescales to be met:

Milestone	Weeks after contract
Preliminary Design Review (PDR)	7
Final Design Review (FDR)	16
Factory Acceptance Test	prior to delivery
Final delivery	max. 64 or sooner

2 GENERAL CONDITIONS OF THE CONTRACT

2.1 Contractor's responsibilities

The Contractor is responsible for:

- The preparation of and respect for a detailed schedule for the contract, including the various tasks: preliminary meeting at Elettra, creation of the design and the drawings, procurement of the material, mechanical processing, manufacture, vacuum cleaning, tests, delivery, etc.;
- The creation of contruction drawings (prepared and submitted for approval in the Final Design Review, including all the elements of the complete system) which will become the property of Elettra;
- The manufacture of all the required components;
- The cleaning and the protection precedures for the components during the manufacturing phase;
- The carrying out of the cleaning and the vacuum trials, which must keep to the FESD N. 060 specifications (attached);
- The dimensional control of all the components;
- The cold RF measurements of all the components, the Solenoid magnetic measurements and the cooling circuits'test;
- The packaging and the transport from the Contractor's premises to Elettra's premises;
- The successful achievement of the specified high power operating conditions.

The Contractor is responsible for the final design, the production methods, the testing and for all the aspects of the performance of all supplied components: electromagnetic performance, mechanical and thermal aspects, including testing and certification. Any approval by Elettra of design and components does not release the Contractor from his responsibilities in this respect.
The Contractor will be required to work in close contact with Elettra at all stages of the contract in order to resolve any technical issues or problems that arise in the most timely and efficient manner.

2.2 Contract management

2.2.1 Contract engineer

At the start of the contract the Contractor shall assign an engineer (the Contract Engineer) who will be responsible for all reporting to, and contact with, Elettra.
Elettra will also nominate a Project Engineer who will be the reference person for all the technical issues.

2.2.2 Work programme and progress report

Within 3 weeks of the commencement of the contract the Contractor must issue a detailed programme with clearly defined milestones covering the design, manufacturing, brazing and testing phases in sufficient detail to allow regular progress monitoring.
Thereafter, and throughout the contract, the Contract Engineer shall supply a written report to Elettra every month detailing progress with respect to the programme. This report should contain as a minimum a list of activities and milestones achieved since the previous report, any slippages or technical issues which are likely to affect the performance or the schedule and any proposals to address these slippages or technical issues and an updated schedule and/or milestone list.
Where slippages for more than two weeks against any milestone in the agreed programme is anticipated, the Contractor will both inform Elettra immediately in writing

and make available evidence of all corrective actions being undertaken to mitigate the impact on the contract deliverables.

2.2.3 Inspections

Elettra intends to carry out periodic and/or spot contract inspections at the Contractor's premises and, where deemed necessary, at those of its subcontractors. Contract inspections will be concerned with all the contract compliance issues including Programme, Quality and Performances.
The above mentioned inspections will be notified to the Contractor at least two weeks in advance.

2.3 Technical and Progress Meeting

2.3.1 Kick off meeting

Within 1 (one) week of the start of the contract a kick-off meeting shall take place. Elettra reserves the right to define whether the meeting will be held at the Contractor's site or by a videoconference.
During this meeting the Contractor will present the plan for the execution of the contract. A programme of technical and progress meetings will also be agreed between the Contractor and Elettra.
An agreed set of minutes will be produced following the meeting accurately recording the agreements and actions.

2.3.2 Preliminary Design Review (PDR)

Within 7 (seven) weeks of the start of the contract a Preliminary Design Review will be held with the Contractor. Elettra reserves the right to define whether the meeting will be held at the Contractor's site or at the Elettra's site.
At this review the Contractor will present the proposed design solution. Elettra and the Contractor must agree that the solution proposed is suitable and that it should proceed to a full design. The Contractor shall also present an updated and detailed programme with clearly defined milestones covering the design, manufacturing, brazing and testing phases.
An agreed set of minutes will be produced following the meeting accurately recording the state of the design work as well as all agreements and actions.

2.3.3 Final Design Review (FDR)

Within 16 (sixteen) weeks of the start of the contract the Final Design Review meeting will be held. Elettra reserves the right to define whether the meeting will be held at the Contractor's site or at the Elettra's site.
At this review the Contractor must present to Elettra the detailed final design, including:

1. A complete RF design report of the accelerating structures and waveguide components.

   HFSS or CST MWS and eventually Superfish files are required.
2. A complete magnetic and mechanical design report for solenoid to be installed on the first accelerating structure.
3. A complete mechanical design report for support girders.
4. A complete thermal and mechanical design report for cooling circuits.
5. CAD drawings for accelerating structures, waveguide components and support girders.
6. An updated and detailed manufacturing, brazing and testing programme, with regular milestones to allow progress to be monitored.

7. Test schedules, including the plan for factory tests.
8. Full details of factory testing.

An agreed set of minutes will be produced following the meeting accurately recording the agreements and actions.

2.4 Production control

The Contractor shall record all observations or any other details likely to provide useful information for the analysis of problems that might arise at any stage of manufacturing and brazing process. The record shall be such that each finished structure and support is accompanied with its own and complete set of documents allowing to trace the history of each of its constituents.

These documents shall be available to Elettra representative at any time. Their content shall, however, not be regarded as an official acceptance or approval document.

2.5 Handling, transport and storage

The structures are designed for operation under ultra high vacuum (UHV) and in presence of high electric fields, hence all their constituent components must be perfectly clean and shall be handled with clean gloves only. The handling and transport jig must be perfectly clean and degreased; wherever necessary, it shall be covered with adequate protections.
The Contractor shall ensure that all items are fully and satisfactorily protected during handling and transportation. Packing cases must be robust and suitable for lifting and transportation without damage. Internal packing must be adequate to prevent movement or vibration during transportation: the maximum acceleration allowed during handling and transport phases shall never exceed the value of 2g.
Each structure shall therefore be equipped with two dataloggers (one on each end of the structures) that shall be capable of simultaneously measuring and recording humidity and 3-axis acceleration.
Packing cases and internal packing must be approved by Elettra.

3 TECHNICAL REQUIREMENTS FOR ACCELERATING STRUCTURES AND WAVEGUIDE COMPONENTS

3.1 Accelerating sections L00.01 and L00.02

3.1.1 RF performances

L00.01 and L00.02 are Forward Traveling-Wave, constant gradient, 3375 millimeters long (flange to flange) accelerating structures, working at 2998.010 MHz under ultra high vacuum. Table 1 lists the main technical requirements that must be met by each of the two RF structures at operational conditions.

Table 1. Technical requirements for accelerating structures

Working frequency (under high vacuum)	2998.010	MHz
Type	Forward TWS, Constant gradient, Disk loaded (No Nose Cones)	
Phase advance per cell	$2\pi/3$	
Working temperature	33 +/- 1	°C
Max. Input Power (peak)	25	MW
Max. Pulse Duration	5.0	μs
Max. Repetition Rate	50	Hz
Max. VSWR at Full Power	<1.05	
Filling Time	< 1.5	μs
Q-factor	>13000	
Targeted Shunt Impedance (mean)	>60	MΩ/m
Energy gain @16MW Input Power	> 48	MeV
Input Coupler type	Symmetric 180 degree Feed	
Total length (flange to flange)	3375	mm
Average iris radius	>9.8	mm
Minimum iris radius	>8	mm
Flange type (RF)	LIL	
Flange material (RF)	316LN	
Flange type (Beam Port)	CF40	

RF power is coupled into and out of the accelerating structures through two coupling cavities. The transition from the rectangular waveguide WR284 is made by means of matching irises, the exact size and plane of which are adjusted to obtain the match required.
Elettra also requires the edges of the coupling irises to be rounded to minimize possible field enhancement and RF heating. Contractor shall provide a detailed design report for the dimensioning of the coupling irises.

Amplitude asymmetries and phase shifts, over the beam aperture, in the axial electric field introduced by lateral apertures of coupling cells must be compensated: the input and output coupler cavities shall be of the symmetric 180 degree-feed type having diametrically opposed sidewall-coupling aperture.
Symmetric 180 degree-feed couplers erase the dipole transverse momentum on the beam due to the total phase and amplitude symmetries in the coupling iris plane. Nevertheless, mechanical tolerances in the machining of the coupling apertures could

bring to some residual asymmetry. In any case, field asymmetries due to dipole components shall never exceed the values listed in Table 2.
Moreover the coupler cavities should have racetrack geometry to minimize quadrupolar fields. Maximum values for the induced quadrupole components of the fields are listed in Table 2 as well.

Table 2. Technical requirements for the couplers

ΔE/E	dipole (Residual)	0.1 %
Δϕ	dipole (Residual)	0.1 degree (S-band)
ΔE/E	quadrupole	0.2 %
Δϕ	quadrupole	0.1 degree (S-band)

3.1.2 Vacuum system requirements

Design and development of ports for pumping and monitoring vacuum in each of the two accelerating structures is in the scope of the Supply.
Elettra requires an average vacuum pressure before applying RF power better than $1x10^{-9}$ mBar. Vacuum pressure at maximum operating RF power shall be better than $1x10^{-8}$ mbar. The vacuum design of the system should be able to achieve the required vacuum pressure: capacity of vacuum pumps to attain the requested operational vacuum pressure in the two structures has to be clearly specified by the Contractor. Ion pumps as well as the vacuum gauges are not in the scope of the Supply.
Design of ports for pumping and monitoring vacuum shall be approved by Elettra.

Elettra requires helium leak rate meet the acceptance class (b), as specified in "Manufacturing and Cleaning Technical Specification for the FERMI Project UHV devices" (FESD N. 060). Maximum bake-out temperature shall be 150°C.

For all the details about vacuum components' requirements, acceptance tests' procedures and final reports, make reference to the attached document "Manufacturing and Cleaning Technical Specification for the FERMI Project UHV devices" (FESD N. 060).

3.1.3 Cooling circuits

Cooling circuits will be provided by the Contractor, as parts of the RF structures.
Once installed at Elettra, thermal stabilization will be guaranteed plugging the two accelerating structures to the existing system. The coolant will be demineralized water; the following table lists the operational parameters of the existing system:

Table 3. Operational parameters

Ambient temperature	26	°C
Minimum water temperature at structures' input	27	°C
Maximum water temperature at structures' input	35	°C
Maximum attainable flow rate	60	l/m

Design and development of cooling circuits capable of assuring the necessary heat exchange rate to keep the structures tuned is in the scope of the Supply.
Elettra requires cooling circuits to be made by copper pipes or copper blocks brazed onto the structures, the coolant coming in contact only with copper and stainless steel. Elettra also requires cooling circuits to have a smooth path flow to reduce pressure drop. Cooling circuits' fittings shall be 1/2 inch. NPT, male.

Following table reports the technical requirements for cooling circuit of each accelerating structure:

Table 4. *Technical requirements for accelerating structure's cooling circuit*

Maximum power handling	7.5	kW
Maximum water velocity	2.5	m/s
Maximum flow rate	50	l/m
Maximum pressure drop	4	bar

3.1.4 Dimensional requirements and tolerances

The total length of each accelerating structure shall be 3375 millimeters.
The distance between the central axis of the input waveguides and the entering flange of the accelerating structure shall be 77 millimeters as indicated in Figure 2.

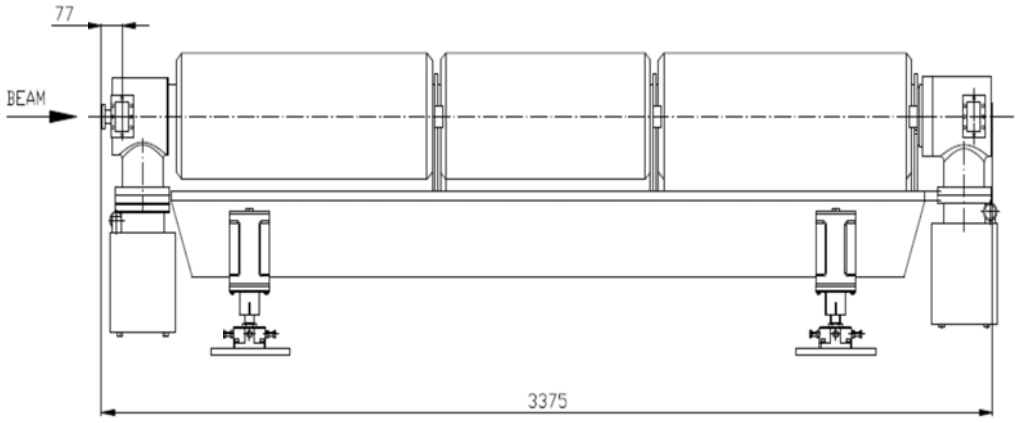

Figure 2. *Accelerating structures' dimensional requirements*

Transverse misalignment of cells and stacks shall never exceed 100 μm relative to the mechanical axis of the structure. To prevent misalignments popping out during stacking and brazing of the cells, Elettra suggests to use interlock rings machined on the cells. Alternative solutions could be proposed by the Contractor providing the misalignment will never exceed the value specified above.
RF flanges, both on the input and output couplers, shall be perpendicular to the joined waveguide within 90±0.1°.

3.2 Waveguide components

Together with dual-feed type accelerating structures, the Contractor shall supply two WR284 waveguide input assemblies as shown in Figure 3. Such waveguide components will be operated in ultra high vacuum. Each assembly is made of:

a. n. 1 - Power splitters
b. n. 2 - WR284, H-type, 180 degree bends

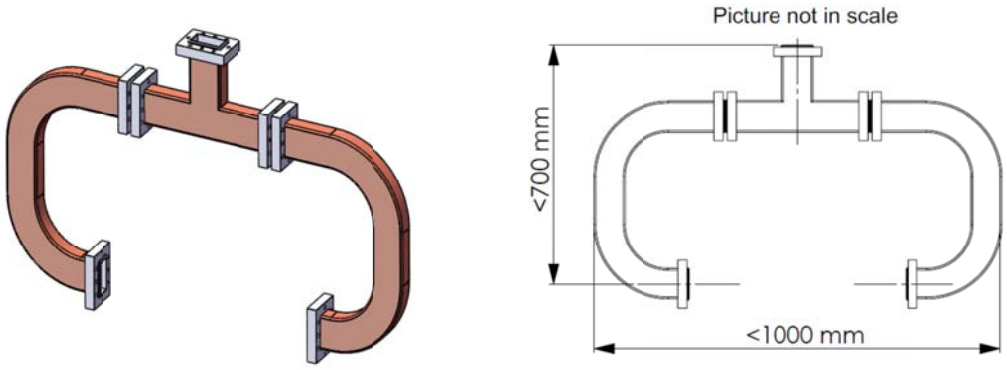

Figure 3. Schematic layout of the WR284 input waveguide assembly

3.2.1 RF performances

The following tables point out the RF and mechanical parameters that shall be met by power splitters and waveguide bends.

Table 5. Technical requirements for power splitters

Working frequency (under high vacuum)	2998.010	MHz
Max. Input Power (Peak)	25	MW
Max. Pulse Duration	5.0	μs
Max. Repetition Rate	50	Hz
VSWR at Full Power	<1.05	
Collinear amplitude unbalance	<0.05	dB
Collinear phase unbalance	<0.5	degree (S-band)
Waveguide type	WR284	
Wall thickness	4.4	mm
Material	OFHC copper	
Flange type	LIL	
Flange material	316LN	

Table 6. Technical requirements for H-type, 180 degree waveguide bends

Working frequency (under high vacuum)	2998.010	MHz
Max. Input Power (Peak)	25	MW
Max. Pulse Duration	5.0	μs
Max. Repetition Rate	50	Hz
VSWR at Full Power	<1.02	
Insertion Loss	<0.02	dB
Waveguide type	WR284	
Wall thickness	4.4	mm
Material	OFHC copper	
Flange type	LIL	
Flange material	316LN	

3.2.2 Vacuum requirements

Elettra requires helium leak rate meets the acceptance class (b), as specified in "Manufacturing and Cleaning Technical Specification for the FERMI Project UHV devices" (FESD N. 060).

For all the details about vacuum components requirements, acceptance tests procedures and final reports, make reference to the attached document "Manufacturing and Cleaning Technical Specification for the FERMI Project UHV devices" (FESD N. 060).

3.2.3 Cooling circuits

To maintain RF phase stability, each component will run temperature-controlled water through cooling tubes.

Elettra requires all components are implemented with cooling tubes (x-band waveguide WR90, or equivalent) brazed to both broad sides of S-band waveguides. Elettra also requires cooling circuits to have a smooth path flow to reduce pressure drop.

The input/output of the cooling tubes has a ~5cm long, 1/2 inch inner diameter (i.e. 5/8 inch outer diameter) copper tube for plumbing connection. The clearance between the back of flange and end of cooling tubes shall be no less than 75 mm in order to have no interference during the installation of the components.

3.2.4 Dimensional requirements and tolerances

Waveguide bends are H-type, 180° bends as shown in Figure 3. Each component has two 90° bends with angular tolerance ±0.1°. All flanges shall be perpendicular to the joined waveguide within 90±0.1°.

The distance between the central axis of the input waveguides and the RF flange of the power splitter (i.e. flat surface, not the tip of the flange) shall be less than 700 mm; moreover, the overall transverse dimension shall be less than 1000 mm as shown in Figure 3.

Elettra requires in-formed bends, not in-mitred. H-type bends shall be machined by bending a whole waveguide body without any brazing joint except for those of the RF flanges.

Contractor shall provide mechanical drawings of power splitter and waveguide bends. Overall dimensions of waveguide components shall be approved by Elettra.

3.3 Waveguide input assemblies and connection to the sections

Contractor shall assemble each of the two waveguide input assemblies as depicted in Figure 3. Each input waveguide assembly shall be uniquely associated with its structure. For this purpose the Contractor must clearly apply on each component a label indicating the reference section.

Contractor shall also connect each input waveguide assembly to the relative section making sure that no rotation or tilting occurred on the RF flanges or waveguides that will prevent from connecting all the components together.

The full waveguide input assembly must be characterized and measured assuring that the following RF parameters are met:

Table 7.	*Technical requirements for waveguide input assembly*	
Working frequency (under high vacuum)	2998.010	MHz
Max. Input Power (Peak)	25	MW
Max. Pulse Duration	4.0	μs
Max. Repetition Rate	50	Hz
VSWR at Full Power (input port)	<1.05	
Amplitude unbalance (section's ports)	<0.07	dB
Phase unbalance (section's ports)	<1	degree (S-band)

3.4 Design and manufacturing criteria

Design, tolerances, manufacturing criteria and other specifications of the components shall be in accordance with the generally required quality standards and techniques:

- All the cells and waveguide components shall be thoroughly cleaned after the rough machining has been completed. Drilled and tapped holes shall be individually cleaned using a syringe to ensure that they are free of chips and cutting fluids.
- Cutting fluids either with high organic constituents or 50 ppm or more of sulphur or silicone are prohibited. A not exhaustive list of approved cutting fluids is reported in "Manufacturing and Cleaning Technical Specification for the FERMI Project UHV devices" (FESD N. 060).
- Structures and waveguide components are intended to operate under ultra high vacuum conditions.

For all the manufacturing and cleaning procedures make reference to the attached document "Manufacturing and Cleaning Technical Specification for the FERMI Project UHV devices" (FESD N. 060).

3.5 Materials

The RF structure body (cells and couplers) material must be OFHC grade copper. The inner surfaces are targeted as Ra = 0.1 μm, guaranteed is Ra < 0.4 μm.
All parts other than Cu ones must be AISI 316LN stainless steel, brazed to copper or non-magnetically welded to other AISI316LN stainless steel parts. After all production processes the permeability of any used material shall be less than μ = 1.01.

The waveguide shall be OFHC Grade Copper, thick-wall (0.173" or equivalent), WR284. The CERN-LIL type flanges, shall be 316LN stainless steel.

3.5.1 OHFC grade copper

3.5.1.1 Chemical composition

The reference publications are standards ASTM F68-05, B170-99(2004) and ISO 431. Cu min: 99.99%.
The impurities shall be in accordance with ISO 431 except:

O_2	5 ppm max.

Impurities:

Element		Cu-OFE
Copper	min.	99.99
Cadmium	max.	0.0001
Phosphorus	max.	0.0003
Sulphur	max.	0.0018

Zinc	max.	0.0001
Mercury	max.	0.0001
Lead	max.	0.001
Selenium	max.	0.001
Tellurium	max.	0.001
Bismuth	max.	0.001
Arsenic Antimony Bismuth Selenium Tellurium Tin Manganese		Total of these seven elements not to exceed 40 ppm

3.5.1.2 Structure

In accordance with the standard ASTM E112-96(2004)e1, grain size ≤ 90 μm shall be accepted.

3.5.1.3 Inclusions

In accordance with standard ASTM F68-05, only Classes 1 and 2 shall be accepted.

3.5.1.4 Mechanical

Tensile testing must be performed on test samples with their longitudinal axis parallel to that of the bars.
At room temperature:

Tensile strength	R_m		240 - 280 N/mm^2
Yield stress	R_p 0.2%		200 - 240 N/mm^2
Elongation at break	A_5	min.	25%

3.5.1.5 Electrical (as per ASTM B193)

Conductivity in the annealed condition: min. 101% IACS

3.6 Interfaces

- The RF input/output flanges shall be manufactured according to drawing GKVP002.
- The sections' end flanges shall be CF40.
- The end connection of the cooling pipes shall be ½ in. male NPT.

4 TECHNICAL REQUIREMENTS FOR ACCELERATING STRUCTURE'S SOLENOID

Elettra requires the first accelerating module (i.e. L00.01) to be equipped with a solenoid.
The solenoid magnetic field length *Leff* is required to be about 0.9m long with a fringe field length less than 0.1m and a nominal central field B_0 of 600Gauss.
The nominal central magnetic field B_0 is 600Gauss with a range of operation of 50 to 1000Gauss.
The good field region is specified to be a tube, length 0.8m, radius 5mm, with a solenoid field homogeneity (longitudinal and radial) better than 0.05% over the full range of operation.
The solenoid field axis must be aligned within 100μm with respect to the accelerating field axis in the range 50 to 1000Gauss.

The solenoid conductor will be excited with a power supply of 90A-80V.
It will be cooled using demineralized water with a nominal pressure of 15bar. Elettra requires a maximum flow rate of 15l/min and the maximum pressure drop to be less than 4 bars.

All relevant requirements are reported in the table below.

Table 8. *Technical requirements for L00.01 solenoid*

Nominal field $B_{0,nom}$	600	Gauss
Range of operation $B_{0,range}$	50 to 1000	Gauss
Magnetic length L_{eff} (over the full range $B_{0,range}$)	0.9 ± 0.1	m
Magnetic fringe field length - each side (over the full range $B_{0,range}$)	<0.1	m
Maximum current	90	A
Maximum voltage drop	80	V
Inlet coolant pressure	15	bar
Maximum coolant pressure drop	4	bar
Maximum coolant flow	15	l/m
Field homogeneity $\Delta B/B_0$ at z = ±400mm and r = 5mm (over the full range $B_{0,range}$)	0.05%	Gauss
Alignment between the solenoid magnetic axis and the accelerating structure axis (over the full range $B_{0,range}$)	<100	μm

5 TECHNICAL REQUIREMENTS FOR SUPPORT GIRDERS

5.1 General description

Each accelerating structure shall be mounted on an adjustable support structure. Providing proper stability over time together with reliable alignment is the main function of the support structure. The support structure is mainly made of: the carbon steel girder, three adjustable feet to connect the girder to the floor, alignment supports connecting the cavity to the girder, reference points (fiducials) that shall be characterized with respect to the cavity beam axis. Figure 4 shows a possible solution for an RF cavity support structure.

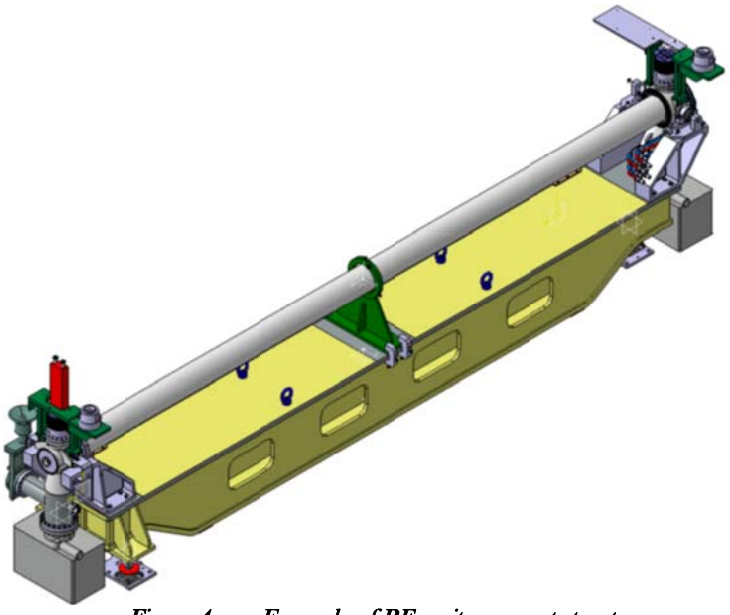

Figure 4. Example of RF cavity support structure

5.2 The girder

The girder, made of carbon steel, shall be designed to support the mass of the cavity and of all devices. The girder lowest natural frequency shall be equal or greater than 60 Hz (for the first measured natural mode). The first natural mode shall be calculated taking into account the mass of the accelerating structure, of the girder and of all devices mounted on the support. The girder, once welded, must undergo an annealing process in order to relieve the structure of the weld-induced stresses and guarantee the required tolerances over time. The carbon steel (Fe 410 B or better) girder shall be adequately protected from corrosion (i.e. the structure shall be epoxy painted). The color shall be RAL 1002. In Figure 5 there is a girder structure example.

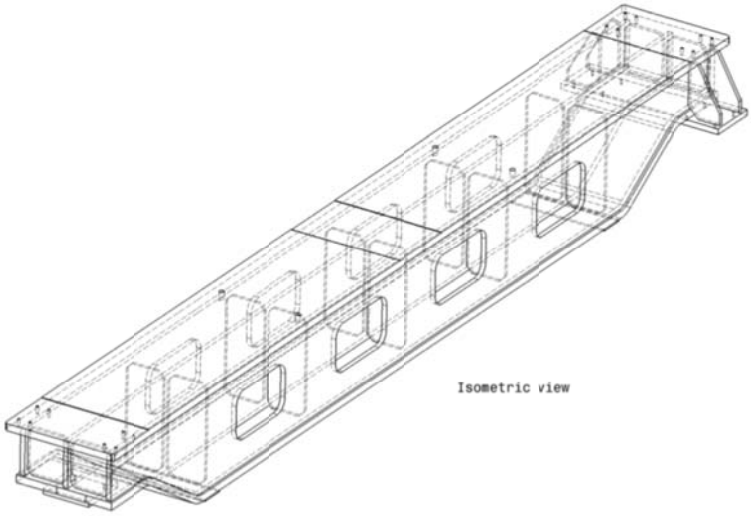

Figure 5. Girder structure example

5.3 Adjustable feet

Three feet are required and must guarantee the following:

- provide a firm and stable support once fixed in the aligned position;
- allow for a prompt and smooth alignment;
- ease of adjustment operation.

Elettra proposes the adjustable feet as in Figure 6. Two pairs of screws align the foot in the horizontal plane, while the adjustment screw allows for vertical positioning and come in appropriate thread sizes, according to the supported mass. The feet will be fixed with screws to plates grouted on the floor of the Linac tunnel. Travels, dimensions and pattern of the feet fixing holes shall be defined in agreement with Elettra.

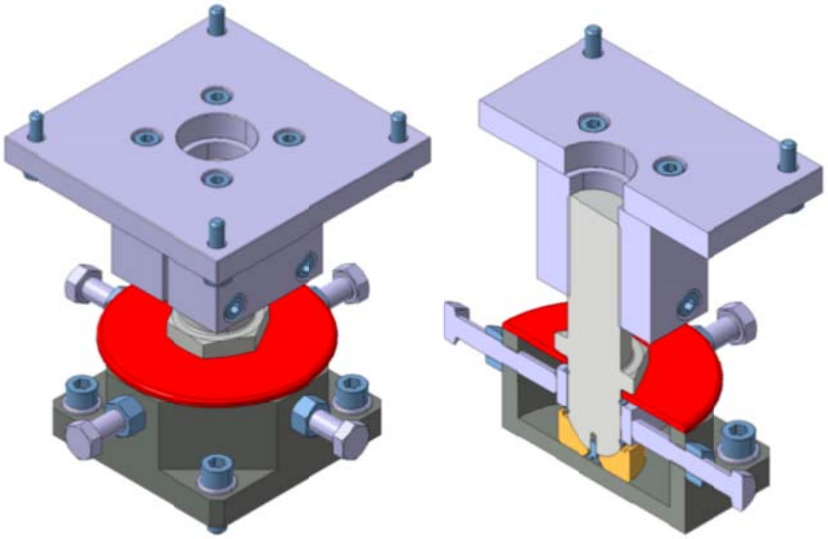

Figure 6. Example of adjustable feet

5.4 Adjustable supports

In order to connect the accelerating structure to its girder, proper adjustable supports shall be realized. The goal of the supports is to allow for fine alignment throughout the cavity. The adjustable supports ease the manufacturing of the main girder and relax the girder mechanical tolerances (this adjustment system could compensate for planarity and parallelism errors of mounting surface). Elettra proposes adjustable supports like those showed in Figure 7.

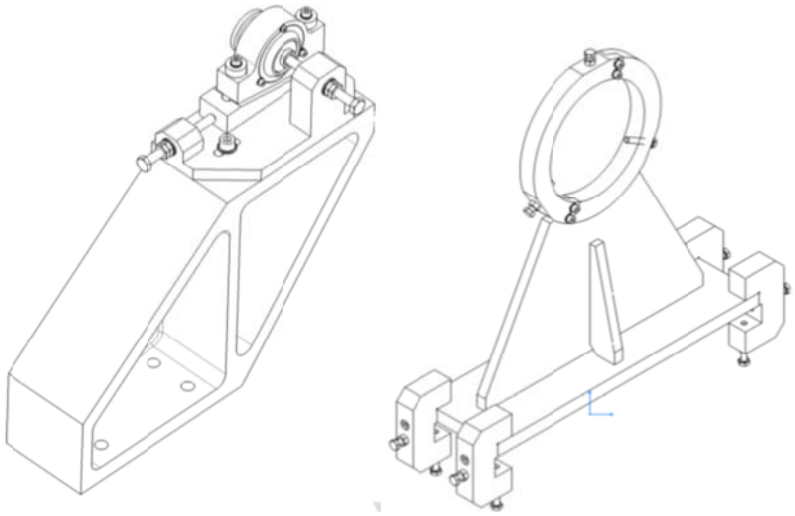

Figure 7. Example of adjustable supports

The adjustable supports shall allow at least the following travels and resolutions:

Table 9. Technical requirements for adjustable supports

	Horizontal direction	Vertical direction	Longitudinal direction	Roll
Travel	±2 mm	±2 mm	±2 mm	±2 mrad
Resolution	±20 μm	±20 μm	±20 μm	±20 μrad

5.5 Reference points

Reference points (or fiducials) are points characterized on the cavity (or permanently linked to the cavity) that allow for the correct structure alignment. The reference points shall be characterized with respect to the cavity longitudinal axis and to the deflection plane. The reference points shall be univocally positioned to define the cavity axis and the deflection plane. The reference points shall be characterized by the Contractor. Minimum configurations for the reference points are:

- at least three points, as far as possible apart;
- at least two points and one flat surface for a bubble level.

As Figure 8 shows, each reference point consists of a calibrated hole (φ6 H7, 15mm deep) on a flat surface (minimum dimension is a φ 50mm circumference). The hole shall receive the prism of a 3D measuring system or of a theodolite.
A free space around the reference point and the possibility to "see" all the reference points from an external measuring tool shall be taken into account.

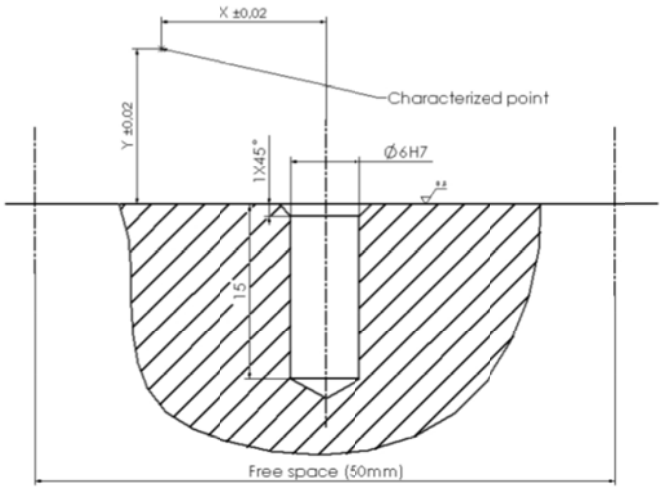

Figure 8. Reference holes

5.6 Beam height and overall dimensions

The two accelerating structures will be installed in the FERMI Linac tunnel. The support structure design shall take into account the beam height, the auxiliary existing structures and their dimension as described in Figure 9 and Figure 10.

The flange to flange overall longitudinal dimension of the cavity section is 3375mm, while the base plate distance is 2220mm. The accelerating structures' end flanges are CF40 flanges, the first is a rotatable flange, the second a fix one. The hatched block identifies a zone used by the intra-sections' girders that shall not be occupied.

The height of the electron beam from the main floor is 850mm, while the distance between the electron beam and the base plate is 680mm.

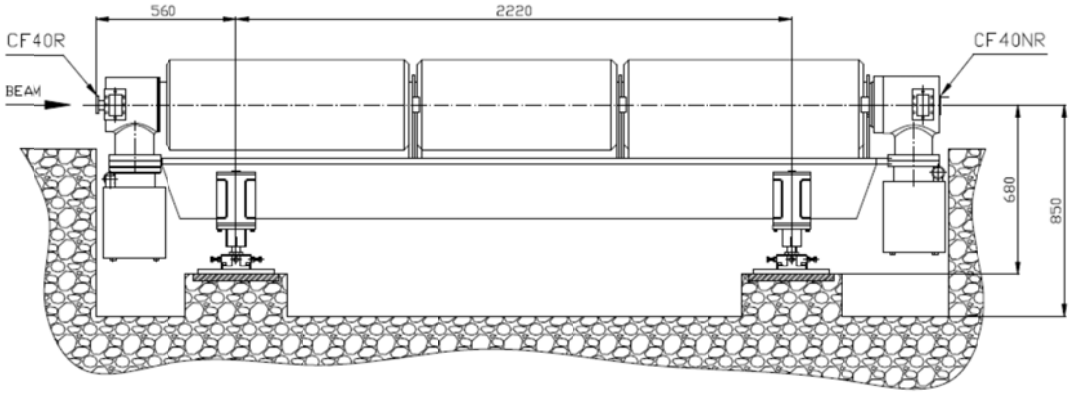

Figure 9. Support structure front view

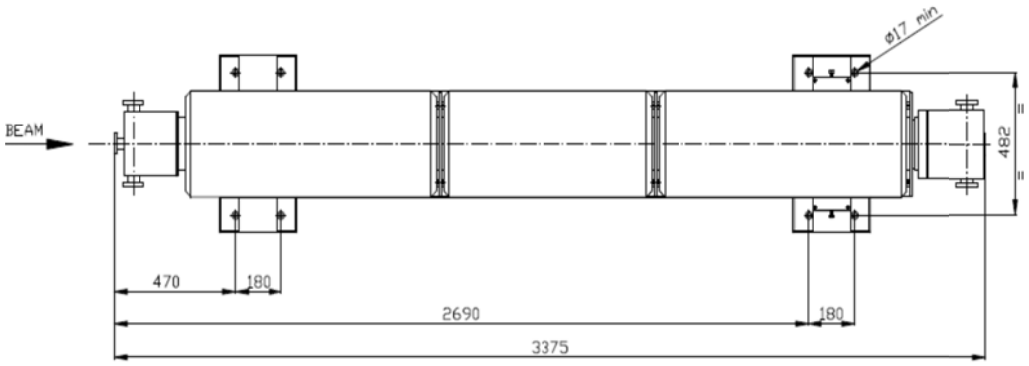

Figure 10. Support structure top view

The feet will be mounted on plates (20mm thick) grouted to the floor. Figure 11 shows the plate and foot assembly dimensions after grouting operations. The total height of the assembly (30±1mm) shall be considered during the design of the girder.

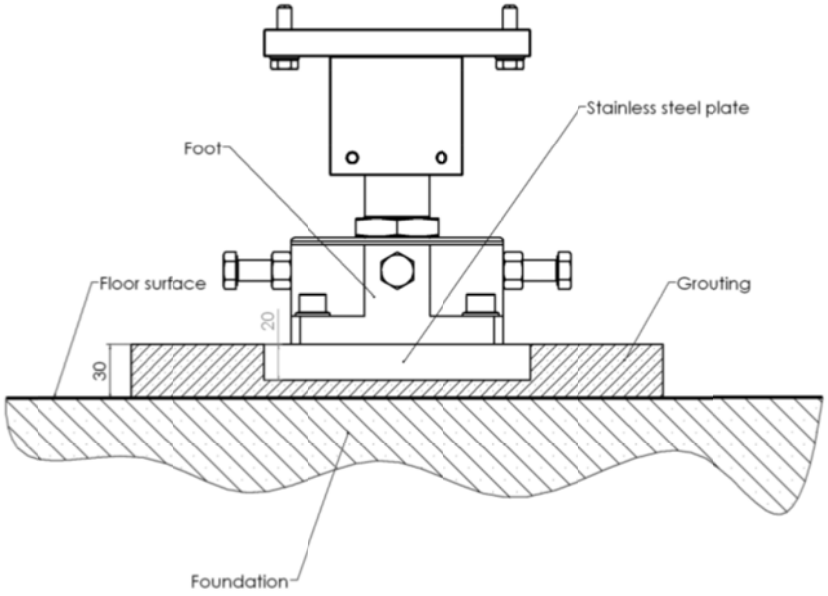

Figure 11. Feet grouted to the floor

6 FACTORY AND SITE ACCEPTANCE TESTS

Accelerating structures and related components will be tested at the factory (Factory Acceptance Test – FAT) and at Elettra (Site Acceptance Test – SAT).
The FAT will consist of the following tests, as described in the corresponding chapters:

1. Mechanical and RF tests (see §6.1)
2. Accelerating module tests (see §6.2)
3. Solenoid magnetic measurements (see §6.3)
4. Vacuum tests (see §6.4)
5. Cooling circuits' tests (see §6.5)

All measurement equipment used for the tests shall have calibration curve and test certificates as appropriate.
Elettra representatives shall have the right to participate. The Contractor shall give notice of minimum two weeks for Elettra representatives to participate to the FAT. The test sequence shall be approved by Elettra before the beginning of the acceptance tests.
The SAT will consist of the following tests:

1. Mechanical survey and RF measurements of power splitters, H-type 180° bends and waveguide assemblies (see §6.1.1 and §6.1.2)
2. Vacuum tests (see §6.4)
3. Cooling circuits' tests (see §6.5)
4. High power tests (see §6.6)

6.1 Mechanical and RF tests

6.1.1 Mechanical survey and RF measurements of power splitters and H-type 180° bends

Contractor shall carry out a complete visual inspection of each waveguide component with particular attention to the surface finish: no scratch shall be visible on both inner surface or RF flanges.
Contractor shall perform a mechanical survey of power splitters and H-type 180° bends verifying that all dimensions and tolerances are within specifications. Contractor shall also carry out RF measurements of each power splitter and waveguide bend verifying that RF performances are compliant with the requirements reported in Table 5 and Table 6.
A detailed report of all visual inspection, mechanical survey and RF measurements shall be provided to Elettra.

6.1.2 Mechanical survey and RF measurements of waveguide assemblies

Contractor shall assemble each of the two waveguide input assembly as described in §4.2. Each input waveguide assembly shall be uniquely associated with its structure: Contractor must clearly apply on each component a label indicating the reference structure.
Contractor shall connect each input waveguide assembly to the relative section making sure that no rotation or tilting occurred on the RF flanges or waveguides that will prevent from connecting all the components together.
After mechanical checks described above, Contractor shall carry out RF measurements on both waveguide assemblies verifying that technical specifications, as reported in Table 7, are met.
A detailed report of mechanical survey and RF measurements shall be provided to Elettra.

6.1.3 Cold RF measurements of accelerating sections

Following their individual tuning the cells shall be assembled and aligned together with the two RF couplers. Contractor shall match both couplers to the whole structure and tune the accelerating section for travelling wave mode. Each structure shall be then verified and tested at low RF power level with regard to the following parameters:

1. $2\pi/3$ mode resonant frequency of the structure (2998.010 MHz).
   The frequency shall be computed from phase measurements along the cells axis using a mobile short circuit, as a function of frequency. The frequency for which the phase dispersion, modulo 120 deg, is less than ±1 deg over the full length of the structure shall be considered as the resonant frequency.
   Accelerating structures shall work at an operating temperature of 33 ± 1 °C. Elettra requires RF phase shift per cell, modulo 120 deg, to be less than ±1 deg as well as the cumulative RF phase shift to be less than ±2 deg over the full length of the structure.
2. Input matching.
   Elettra requires SWR<1.05 within a 4MHz bandwidth, at least.
3. Total power attenuation at the resonant frequency.
4. Filling time at the resonant frequency.
5. Electric field amplitude and phase along the axis of the structure by the resonant frequency perturbation (bead pull) method.
   Elettra requires electric field amplitude variation along the structure axis to be less than ±5 percent after subtracting the electric field attenuation.
6. Symmetry of the electric field amplitude and the phase at resonant frequency for both, input and output couplers by the perturbation method (vertical and horizontal direction).
7. Quality factor.

All measurements must be performed both before and after brazing. RF performances must be compliant with the technical specification reported in Table 1 and Table 2.
A detailed report of the requested RF measurements shall be provided to Elettra for both the measurements before and after brazing.

6.2 Accelerating module tests

After brazing each structure shall be mounted on its mechanical support. Input waveguide assembly shall also be installed on the appropriate section and the followings measurement shall be carried out:

1. Mechanical alignment and straightness errors.
2. Electric field amplitude and phase along the axis of the structure by the resonant frequency perturbation (bead pull) method.
   Elettra requires electric field amplitude variation along the structure axis to be less than ±5 percent after subtracting the electric field attenuation.
3. Symmetry of the electric field amplitude and the phase at resonant frequency for input couplers by the perturbation method (vertical and horizontal direction) feeding the section through the input waveguide assembly.

Transverse misalignment of cells and stacks shall never exceed 100 μm relative to the mechanical axis of the structure. Symmetry of the electric field amplitude and the phase at resonant frequency for input couplers must be compliant with the technical specification reported in Table 2.

A detailed report of the requested RF measurements shall be provided to Elettra.

6.3 Solenoid magnetic measurements

The magnets shall be measured by the Contractor at his own premises prior shipping; magnetic measurements will be performed in DC mode. Elettra must approve the measurement method and the adopted equipment. The Manufacturer shall be responsible for all the necessary equipment and manpower for this task.

All magnetic measurements shall be performed in an air-conditioned room. Room temperature shall be controlled and recorded. No more than ± 2°C variation from the nominal temperature (20 to 22°C) is acceptable.

The measurements can be performed by means of a Hall plate. The manufacturer shall supply the calibration curves and indicate when the calibrations were performed.

Before actual measurements will be started the following sequence shall be performed, in order to test the magnet reproducibility.

1. The magnet will be cycled from i = 0 up to i = i_{max} at least 3 (three) times;
2. A complete map of the magnetic field at i = i_{nom} will be performed;

The magnetic measurements will be carried out at the good field region cylinder surface of the solenoid and at the following current levels:

- i_0 = 0 A
- i_1 = 30 A
- i_2 = 60 A
- i_{max} = 90 A

The power supply output current shall be monitored and recorded during each scan.

The following information shall be extracted from the precise field map measurements as a function of the current:

- the field integral along z axis for R = 0
- the field variation at y = 0 (i.e. horizontal plane) and x = ± 5 mm with respect to the z axis, for all the specified current levels.
- the field variation at x = 0 (i.e. vertical plane) and y = ± 5 mm with respect to the z axis, for all the specified current levels.

The Manufacturer may propose different measurement procedures, but in any case a complete and detailed measurement plan and associated equipment list must be submitted to Elettra for review and approval.

6.4 Vacuum tests

6.4.1 Accelerating structures

Elettra requires an average vacuum pressure better than $1x10^{-9}$ mBar before applying RF power. Vacuum pressure at maximum operating RF power shall be better than $1x10^{-8}$ mbar.

Elettra requires helium leak rate meet the acceptance class (b), as specified in "Manufacturing and Cleaning Technical Specification for the FERMI Project UHV devices" (FESD N. 060).

Contractor shall perform a helium leak check and provide certificate to Elettra before shipping components.

For all the details about acceptance tests' procedures and final reports, make reference to the attached document "Manufacturing and Cleaning Technical Specification for the FERMI Project UHV devices" (FESD N. 060).

6.4.2 Waveguide components

Elettra requires helium leak rate meet the acceptance class (b), as specified in "Manufacturing and Cleaning Technical Specification for the FERMI Project UHV devices" (FESD N. 060).

Contractor shall perform a helium leak check and provide certificate to Elettra before shipping components.

For all the details about acceptance tests' procedures and final reports, make reference to the attached document "Manufacturing and Cleaning Technical Specification for the FERMI Project UHV devices" (FESD N. 060).

6.5 Cooling circuits' tests

6.5.1 Accelerating structures and waveguides

Contractor shall perform hydrostatic leak tests keeping the pressure in all pipes at 16 bars not less than 4 (four) hours. The test will be successful if the pressure gauge after 4 (four) hours measures the same initial pressure (16 bars) with a tolerance of 0.3 bars.

Test certificate has to be provided to the Elettra before shipping components.

6.5.2 Solenoid

Contractor shall perform hydrostatic leak tests keeping the pressure in all pipes at 30 bars not less than 4 (four) hours. The test will be successful if the pressure gauge after 4 (four) hours measures the same initial pressure (30 bars) with a tolerance of 0.3 bars.

Test certificate has to be provided to the Elettra before shipping components.

6.6 High power tests

High power tests and RF conditioning of the two accelerating structures will be carried out at Elettra: the two accelerating structures will be considered fully RF conditioned when they will be able to operate at full power (i.e. 25 MW) and 4 μs RF pulse width without any arc for more than 8 (eight) consecutive hours. The accelerating structures shall be able to be fully conditioned in 1 (one) month. If it will not be the case, the structures will be rejected.

Acceptance will depend upon successful achievement of the specified operating conditions.