Standard Gate Valve
Installation & Maintenance Manual

11000 Series
Manual Actuator
Valves built after 1995

HVA, LLC
12880 Moya Boulevard
Reno, Nevada 89506
U.S.A.

11000 Series Gate Valves

Read all instructions in this manual before attempting to service the valve.

This manual applies to valves built after 1995. For valves built prior to 1995, contact the factory.

The first two digits of the serial number indicate the year of manufacture.

Table of Contents **page**

Introduction	2
Standard Specifications	3
Installation	5
Operation	6
Maintenance, 1.5"–12" valves	8
Gate and Bonnet Seals	9
Actuator Bearings	10
Bellows & Shaft Seals	14
Seal Plate Assembly, Pins & Bearings	18
Adjustment	26
Compression Adjustment	26
Valve Adjustment Chart	27
Service Report	29
Glossary	30
Warranty	31

Introduction

The 11000 Series Gate Valves feature a positive lock-over center mechanism. Easy access to all serviceable parts makes maintenance quick and effortless. Linear actuation allows the use of a welded bellows to seal the actuator which eliminates rotary seals. With an ACME threaded shaft, HVA's manually operated gate valves can be operated faster with fewer turns to open and close.

The HVA stainless steel body offers one of the smallest interior surface areas in the vacuum valve industry. The body and all major internal components are vacuum furnace brazed at 1100°C, at $1x10^{-6}$ Torr, ensuring maximum joint integrity. This eliminates the possibility of virtual leaks or entrapment areas and minimizes body distortion found in conventionally welded valves. For maintenance purposes, the carriage assembly can be removed from the body without removing the valve from the system.

All dimensions in this manual are given in inches unless specified otherwise.

Standard Specifications

Materials	
Valve body and mechanism	304 stainless steel
Welded bellows shaft seal	AM-350
Bonnet / gate seals	
HV	Viton® elastomer
UHV	OFHC copper / Viton® elastomer
Vacuum	
Pressure range	
HV	1×10^{-9} Torr
UHV	1×10^{-10} Torr
Leak rate	2×10^{-10} AtmCC/Sec
Differential pressure	760 Torr in either direction
Maximum Δ pressure before opening	20 Torr
Bakeout Temperature	without solenoid
Elastomer sealed bonnet	150°C
Metal sealed bonnet	
Valve open	200°C
Valve closed	150°C
Actuator	
Manual	60°C
Mechanism	
Cycles until service, application dependent	100,000

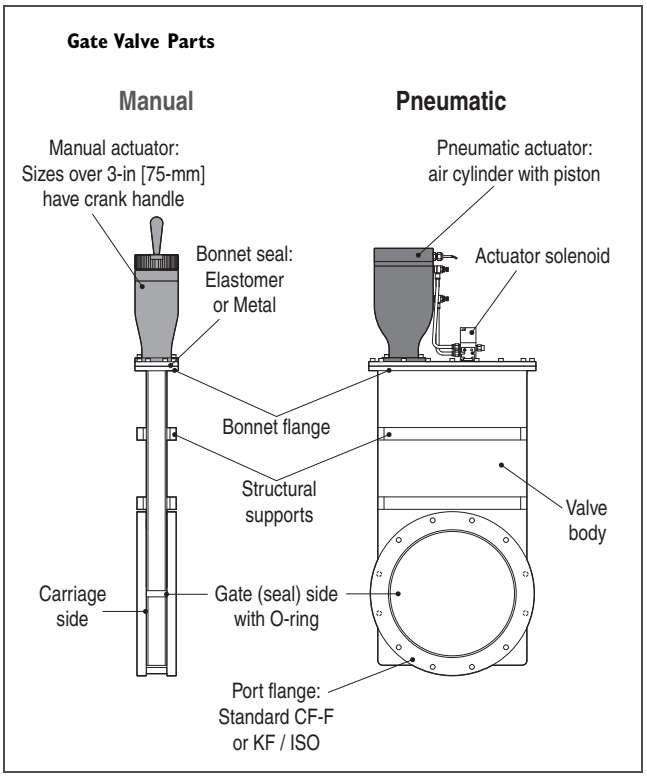

Notes

- Always wear powder-free latex gloves when performing maintenance or repairs of a gate valve. Oil from bare fingers may be missed during a wipe down of parts.

  It is very important that gloves are worn for any grease application. Technical Data Sheets (TDS) and Material Safety Data Sheets (MSDS) are available through www.apiezon.com or www.magnalube.com.
- Be careful not to scratch an O-ring groove. Use a plastic pick for O-ring removal. Small scratches parallel to the groove may not be harmful, but scratches across the groove cause leaks.
- Apply grease sparingly.
- Avoid twisting, stretching or deforming any O-ring.
- For safety, never put hands or any other object in the gate valve.

Model and Serial Numbers

Serial Number stamped on body flange

Model Number: _____

Serial Number: _____

This manual applies to valves built after 1995. For valves built prior to 1995, contact the factory.

The first two digits of the serial number indicate the year of manufacture. In the example above, the valve was built in 2003.

Unpacking

Inspect shipping container before unpacking for damages sustained during transit. Any visible damage should be reported to the transportation company immediately.

Valves are shipped in the closed position. Remove the valve and inspect the flange faces, making sure that they are free of nicks or scratches and that there is no obvious damage to the actuator assembly and body.

Record the model number and serial number for future reference. **Model numbers and serial numbers are required** when purchasing spare parts and when returning the valve for maintenance.

Pre-Installation

WARNING: NEVER PUT HANDS OR ANY OTHER OBJECT IN THE GATE VALVE – SERIOUS INJURIES WILL OCCUR AND VALVE WILL BE DAMAGED.

Determine that the valve and adjacent plumbing in the vacuum system will be adequately supported when installed. To minimize straining of valve body, make sure the mating flanges are in line, flat, parallel and the correct distance apart.

Remove the flange cover and wipe the flange and gaskets with a lint-free, dry wipe. If installing an O-ring seal flange, apply a light film of vacuum grease (*Apiezon-L* grease or an equivalent is recommended) to the O-ring and install in the flange groove.

Bench Test

Before installing the valve into a system, run a bench test to verify that gate functions are operational. A capacitance manometer is not necessary for test purposes. If possible, test the unit when it is under vacuum.

Confirm that the valve actuates properly by carefully checking the operation of the valve using the minimum torque on the actuator to achieve full closure. Turning the actuator clockwise when looking down on the actuator closes the valve. Turning the actuator counter-clockwise opens the valve. From the open position, slowly close the valve by turning the actuator until you visually see the gate O-ring make contact. Increase closing torque as necessary to hear and feel the gate lock into its closed position. Once the gate has been locked closed, no additional torque on the actuator will improve the gate seal.

The weight of the carriage assembly, especially in larger valves, may cause the drive screw mechanism to “chatter” when the valve is being opened or closed. This is normal and, when operating within recommended parameters, does not cause damage to the valve.

Gate O-ring initial contact

Gate locked into closed position

Installation

It is preferable to install the valve with vacuum on the backside of the gate so the valve body remains under vacuum at all times and the pumpdown of the valve body is eliminated.

Valve orientation: for sizes 5/8" [16 mm] – 6" [160 mm], any orientation; for sizes 8" [200 mm] – 50" [1270mm] and greater, contact factory. HVA valves are adjusted at the factory for horizontal actuation. Valves that are mounted with vertical actuation may require more torque on the actuator knob to compensate for the weight of the gate-carriage assembly. Instructions for adjusting the torque are on page 13.

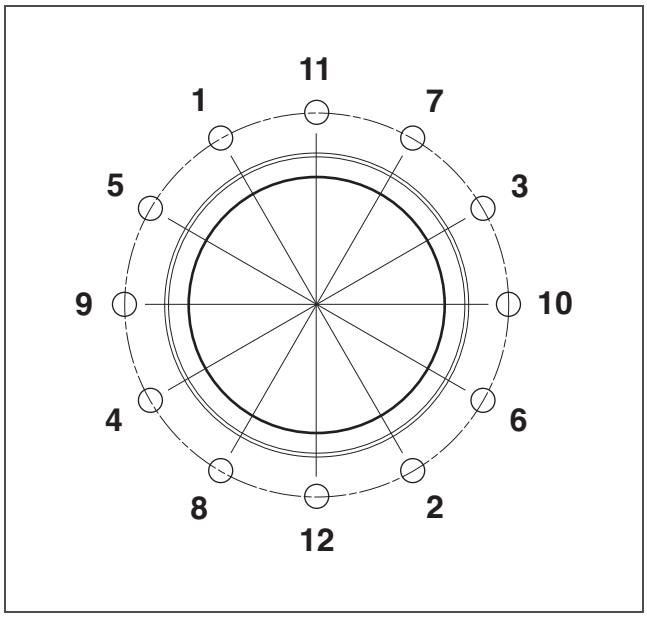

Example Torque Sequence

Proper Torque Sequence:

180° bolt sequence

Always follow the proper bolt sequence for each of the following steps of tightening.

1. Finger tighten bolts first.
2. Tighten snugly with wrench to 1/2 the required torque.
3. Tighten to recommended torque range.

Example Torque Sequence for illustration purposes only. Number of bolt holes will vary depending on flange type and size.

Set up a clean, well-lit workbench for any maintenance.

Making sure that no foreign particles enter the valve, proceed with installation. When installing a valve, it is imperative that proper length bolts be used. **Bolts longer than the thickness of both mating flanges will damage the body panels and destroy the seal surface area for the gate O-ring. For best results, always use bolts that are at least 1/4-inch (6.4 mm) shorter than the thickness of both mating flanges.**

Lightly grease the flange bolts with high temperature, non-galling type grease such as Loctite® *Heavy Duty Anti-Seize* or equivalent.

Carefully tighten the bolts around the flange using the proper torque sequence until flanges are metal to metal and bolts are at proper torque. See chart below for proper torque on bolts.

COPPER GASKETS

For CF-F flanges

Valve size		Torque	
inch	mm	ft-lbs	N•m
5/8"	16	6 – 8	8.2 – 10.9
1½"	38	12 – 13	16.3 – 17.7
2" - 21"	51 - 533	12 – 15	16.3 – 20.4

VITON® O-RINGS

For KF, ISO, ANSI, JIS, others

Valve size		Torque	
inch	mm	ft-lbs	N•m
5/8"	16	2 – 3	2.7 – 4.1
1½"	38	3 – 4	4.1 – 5.4
2" - 21"	51 - 533	3 – 6	4.1 – 8.2

Operation

For continued trouble-free operation, keep the valve clean and free of contaminants. Use powder-free latex gloves to avoid contaminating the valve with finger oils. Work in a clean environment to avoid other contamination.

Replacement Parts

To order replacement parts or repair kits, call 775-359-4442 or 800-551-4422 toll free. **HVA requires a Model Number and a Serial Number when ordering replacement parts.**

Serviceable Parts

• Bulleted items under each heading are user-serviceable.

Not all parts in the valve are user-serviceable. The drawing indicates which parts may be accessed for on-site service.

Contact the factory for repair of non-user-serviceable parts.

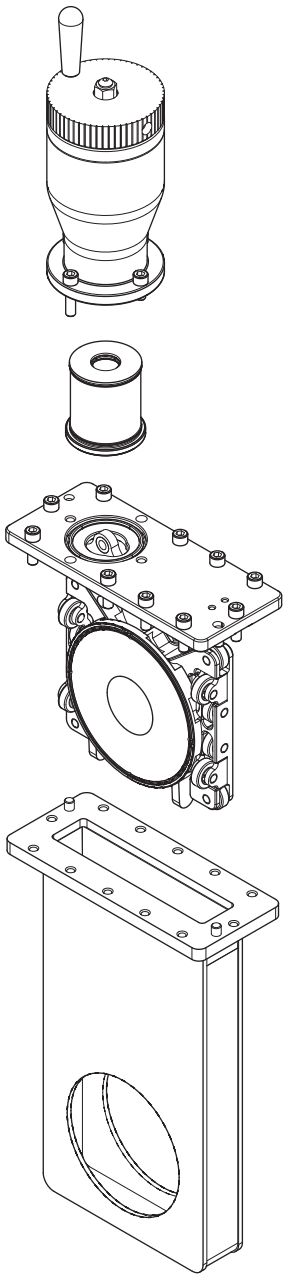

Gate Actuator

• Thrust & radial bearings
• Drive shaft O-ring
• Bellows*
• Bellows O-ring*

* For valves with elastomer sealed bonnets only; for valves with metal sealed bonnets see page 14.

Gate/Strongback Assembly

• Gate O-ring
• Bonnet O-ring or gasket
• Pins
• Bearings
• Washers
• Retaining rings
• Set screws
• Gate spring

Valve Body

No user-serviceable parts

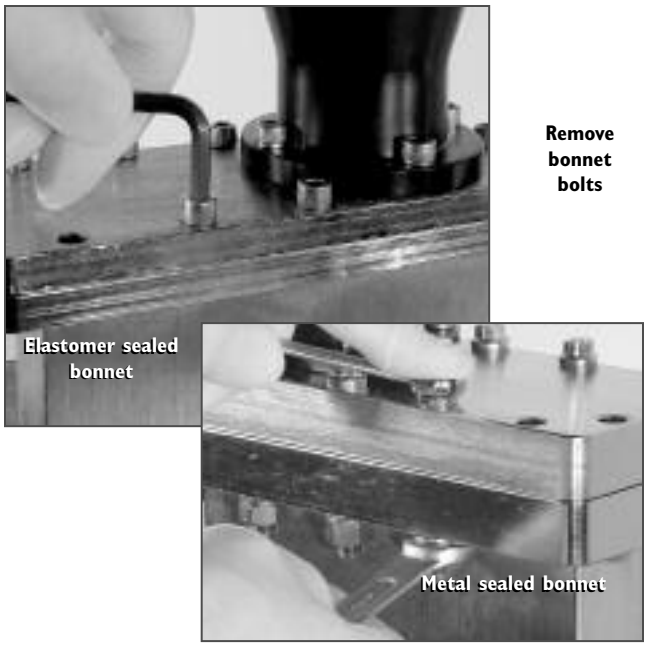

Fully open position

Separate bonnet flanges

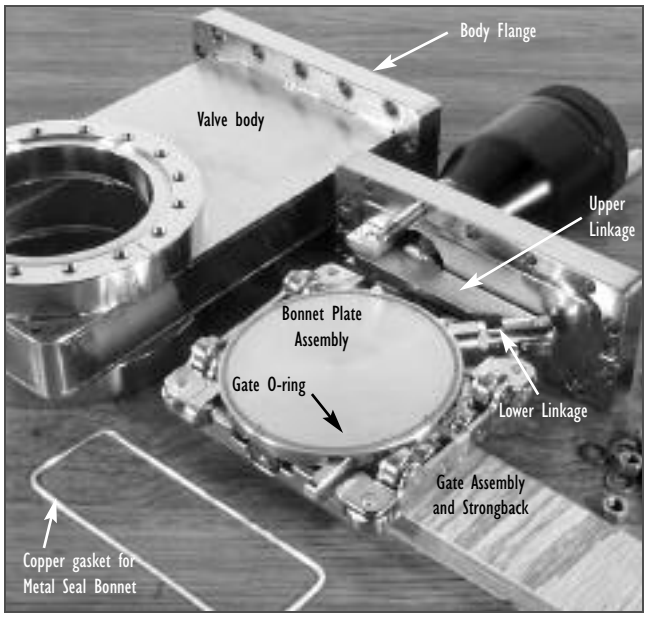

Bonnet Actuator Carriage Assembly, separated from valve body

Bonnet Actuator Carriage Assembly

All servicing of O-rings, bellows, pins and bearings requires removal of the Bonnet Actuator Carriage Assembly from the valve body.

This page details the steps to be followed in all of the listed service procedures:

Gate and Bonnet Seals . . . . . .page 9
Actuator Bearings . . . . . .page 10
Bellows and Shaft Seals . . . . . .page 14
Pins and Bearings . . . . . .page 18
Valve Adjustment . . . . . .page 26

Tools and Materials Required

- Allen wrench set
- 1/2" box wrench
- 1/4" 12 pt. wrench
- 5/16" 12 pt. wrench
- Powder-free latex gloves
- Appropriate replacement O-rings or metal gasket.

> • ALWAYS WEAR POWDER-FREE LATEX GLOVES WHEN SERVICING THE VALVE.

Procedure

1. Both the station and the pump corresponding to the gate valve should be vented to atmosphere.
2. Actuate valve to **GATE OPEN** position.
3. Remove bolts that hold Bonnet Actuator Carriage Assembly to body.
5. Pull out the Bonnet Actuator Carriage Assembly, taking care not to move adjustment of linkage.

   Support the carriage with a wooden block to minimize stress on linkage.

Gate and Bonnet Seals

Standard and Metal Seal Bonnet (MSB)

Tools and Materials Required

- Allen wrench set
- 1/2" box wrench
- O-ring pick, plastic
- Powder-free latex gloves
- Grease for O-rings: *Apiezon L*
- Isopropyl alcohol (IPA)
- Appropriate replacement O-rings or metal gasket.

- ALWAYS WEAR POWDER-FREE LATEX GLOVES WHEN SERVICING THE VALVE.
- BE CAREFUL NOT TO SCRATCH O-RING GROOVE.
- APPLY ONLY THIN LAYER OF GREASE.
- AVOID TWISTING, STRETCHING OR DEFORMING THE O-RING.

Procedure

- Remove ***Bonnet Actuator Carriage Assembly*** per instructions on page 8.

1. Remove Bonnet O-ring or metal gasket and discard. Use a plastic O-ring pick to avoid scratching or marring the O-ring groove.
2. Remove Gate O-ring with the plastic pick, taking care not to scratch the O-ring groove; discard the O-ring.
3. Clean O-ring groove with IPA and dry out with Nitrogen or CDA.
4. Apply a light coat of *Apiezon-L* grease to the new Gate O-ring.
5. Install new O-ring on gate, taking care to avoid twisting or deforming the O-ring.
   Follow the steps pictured at the right for installing the Gate O-ring. Larger valves will require more 180°-apart presses than smaller valves. Continue pressing until the entire O-ring is in the groove, then finish smoothing out the O-ring all the way around the groove.
6. Apply a light coat of *Apiezon-L* grease to the new bonnet assembly Viton® O-ring. Copper gasket install dry.
7. Install new O-ring or gasket on Bonnet assembly, taking care to avoid twisting or deforming the O-ring.
8. Replace *Bonnet Actuator Carriage Assembly* into body.
9. Install bolts and tighten. (For MSB, copper gasket type, tighten side to side 20–25 ft-lb)

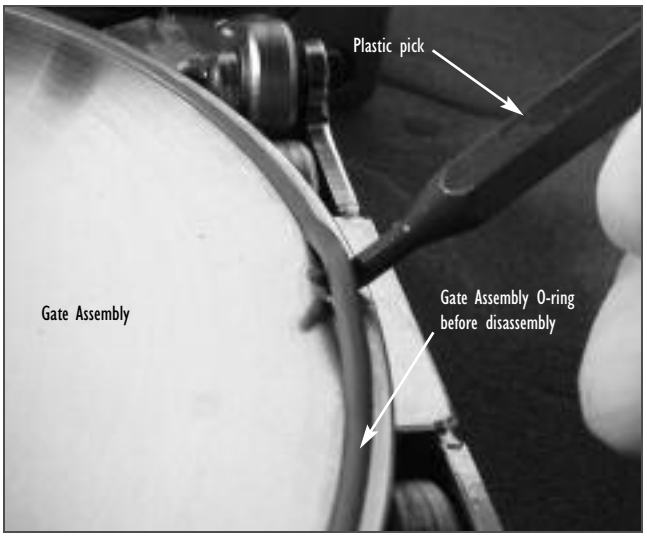

Use plastic O-ring pick to avoid scratching the O-ring groove

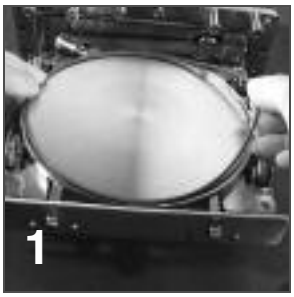

Set new O-ring on gate.

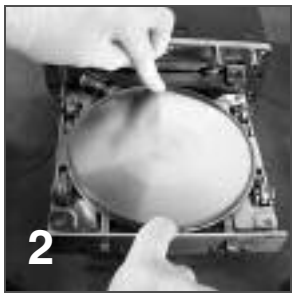

Press O-ring in at 6 and 12 o'clock.

Then press at 3 and 9 o'clock.

Continue pressing O-ring into groove at 180°-apart intervals.

Press straight down without twisting the O-ring.

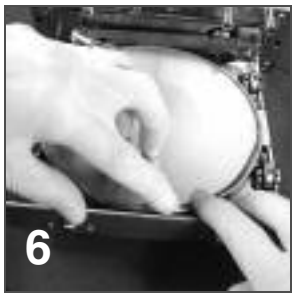

Smooth out the O-ring all the way around the groove.

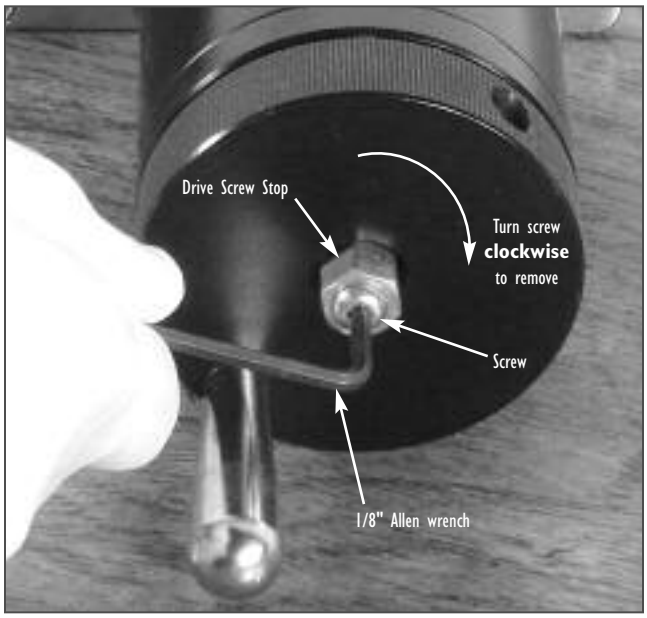

Remove left-hand threaded screw in Drive Screw Stop

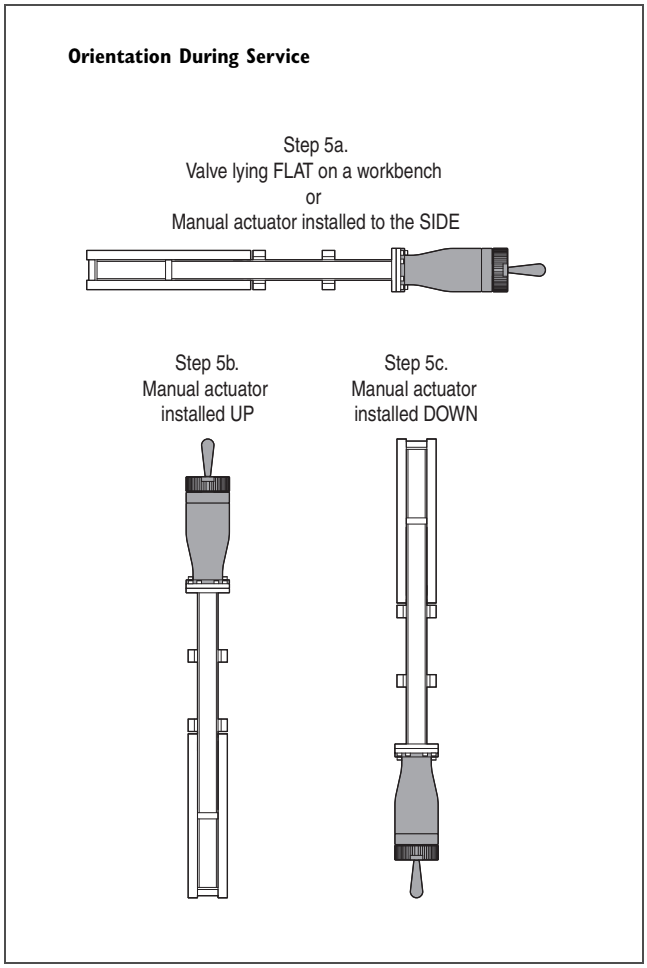

Manual Actuator Orientation

Actuator Bearings Lubrication & Adjustment

1½" to 12" sizes only

Tools and Materials Required

- To do the tension adjustment correctly you will need a vice to hold the assembly
- 1¼" open ended or socket wrench
- Allen wrench set
- Powder-free latex gloves
- Replacement bearings
- Grease for MSB version: *C-100 anti-gall high temp*
- Vacuum grease
- IPA

- ALWAYS WEAR POWDER-FREE LATEX GLOVES WHEN SERVICING THE VALVE.
- GATE MUST BE IN THE OPEN POSITION.

Procedure

1. Lay valve in a flat position if possible.
2. Make sure the valve is in the open position.
3. Remove the left-hand threaded screw located on the top of the actuator using 1/8" Allen wrench. (See Assembly of Knob and Crank, page 11).

☛ This screw only has a left-handed thread and must be turned clockwise to loosen. This applies to valves built after 1995.

4. Remove the Drive Screw Stop.

5a. If valve is lying FLAT on a workbench or installed with the actuator to the SIDE, close the valve. Go to step 6.

5b. If the installed valve position is with the actuator UP, close the valve. Go to step 6.

5c. If the installed valve position is with the actuator DOWN, leave the valve open. Go to step 6.

Actuator Bearings Lubrication & Adjustment

Procedure *(continued)*

6. Loosen the set screw located on the side of the knob using a 5/32" Allen wrench. The set screw does not need to be completely removed.
7. Pull the knob off.

   Notice a flat on the drive nut. On reassembly, position the knob so the set screw matches the flat.

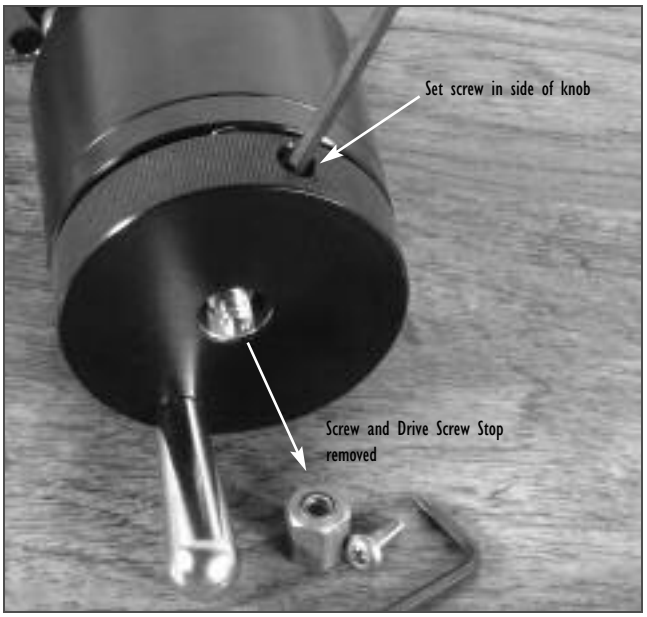

Loosen set screw in knob

Assembly of Knob and Crank

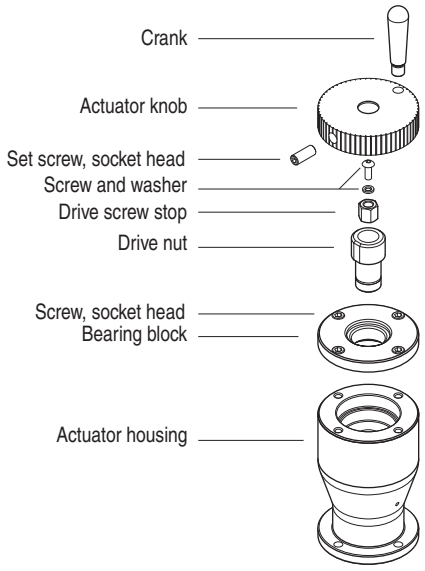

Actuator Overview

Remove knob and crank assembly

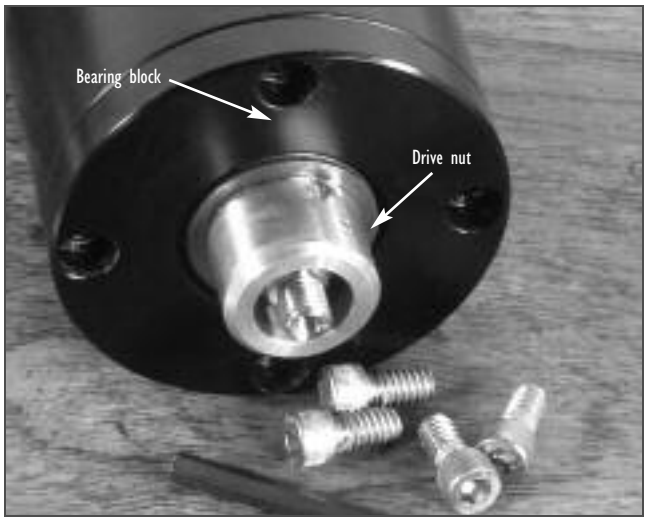

Remove the four bearing block screws

ACME thread on actuator stem is left-handed

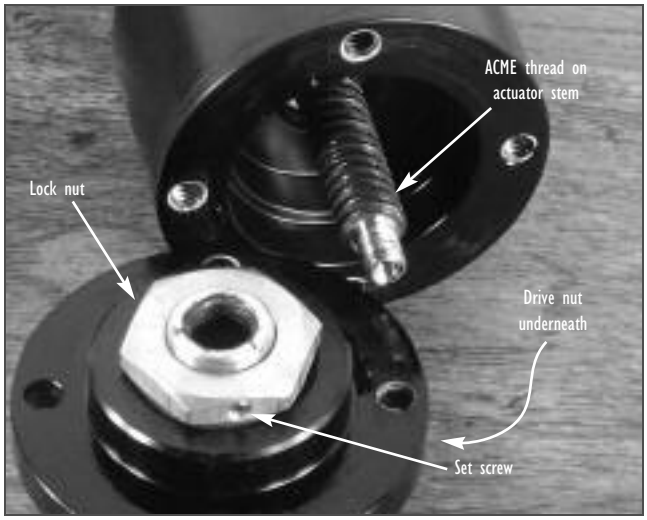

Drive nut and bearing block assembly removed

Actuator Bearings Lubrication & Adjustment

Procedure *(continued)*

8. Remove the bearing block screws (4 each) located above the bearing block (3/16" Allen wrench).
9. Remove the bearing block assembly by turning clockwise. The ACME thread on the actuator stem is left-handed.

   Note: If adjusting tension only, skip steps 10–14 below and go to step 15 on the next page.

10. Loosen set screw on brass hex nut using a 5/64" Allen wrench. The set screw does not have to be completely removed.
11. Remove nut on 4"–12" gate valves / Remove retaining ring on 1½"–3" gate valves.
12. Remove drive nut.
13. Re-grease bearings, thrust race and bearing and bearing block bearing. If bonnet gasket is copper Anti gall high temp grease C-100 is recommended.
14. Re-assemble in reverse order.

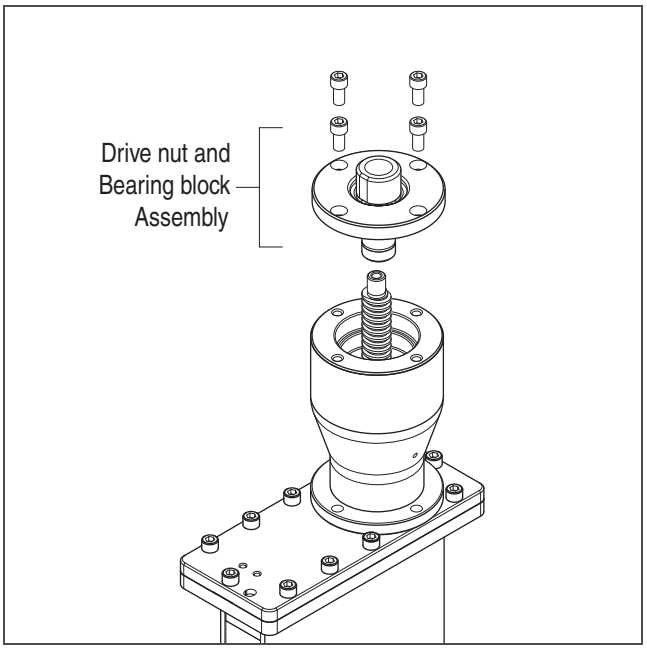

Drive Nut and Bearing Block Assembly

Actuator Bearings Lubrication & Adjustment

Procedure *(continued)*

15. To tighten the bearing block assembly, lightly lock the brass drive nut in place with a vice. *Note: over-tightening may damage the brass nut.*

    With the bearing block assembly in the vice loosen the set screw on the locknut (5/64" Allen wrench). Tighten the nut for more tension using either an open ended or socket wrench, 1¼".

    After removing the assembly from the vice and rotating the bearing block assembly by hand you will be able to feel the increase in tension. Each valve may differ slightly and you will need to adjust accordingly.

    Note: You should be able to turn the drive nut by hand, if you cannot, you have too much tension.

    After the adjustment is made, re-tighten the set screw.

16. Re-grease drive screw with anti gall C-100 high temp grease.

17. Re-assemble in reverse order.

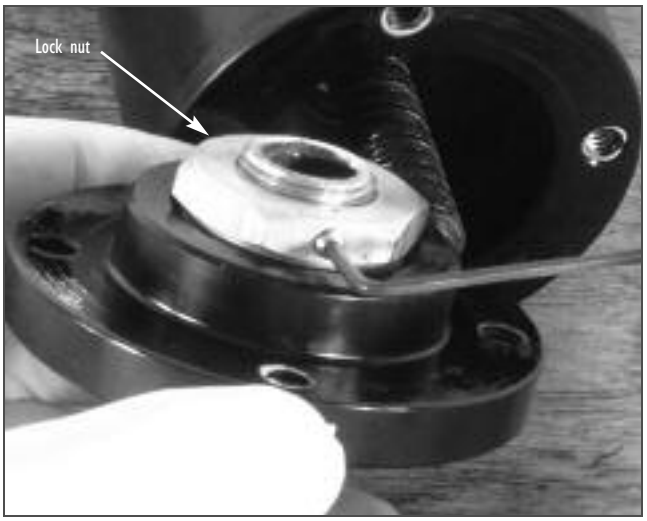

Loosen the lock nut set screw

Remove the lock nut

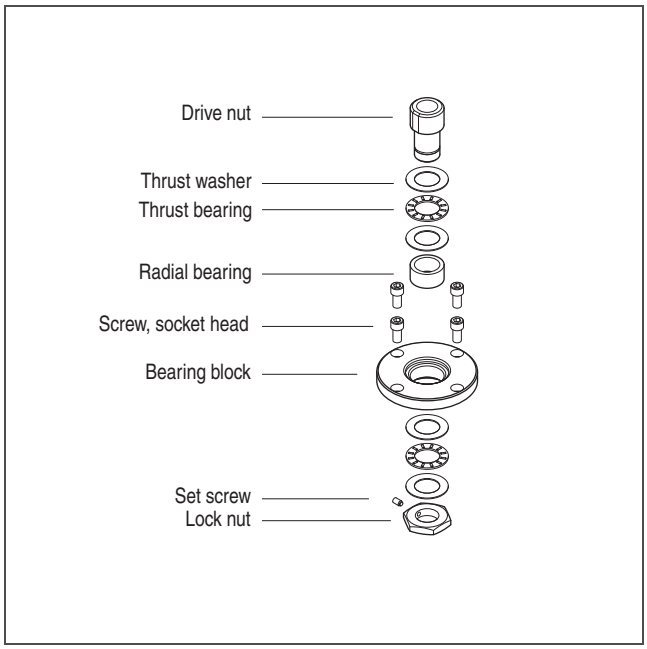

Drive Nut and Bearing Block Assembly Exploded View

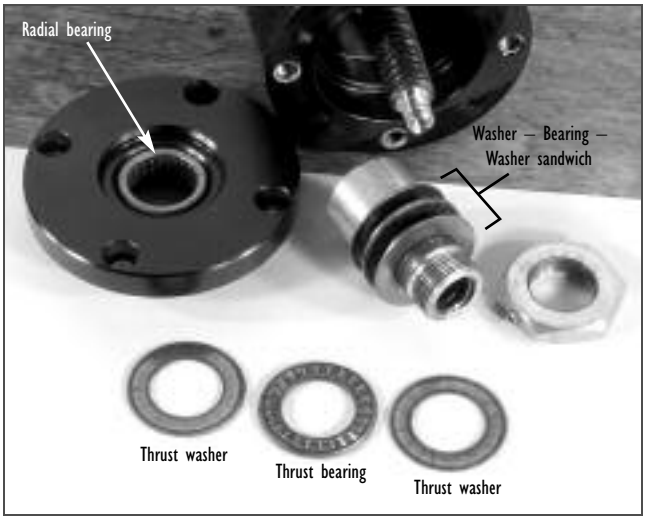

Drive nut and bearing block assembly parts

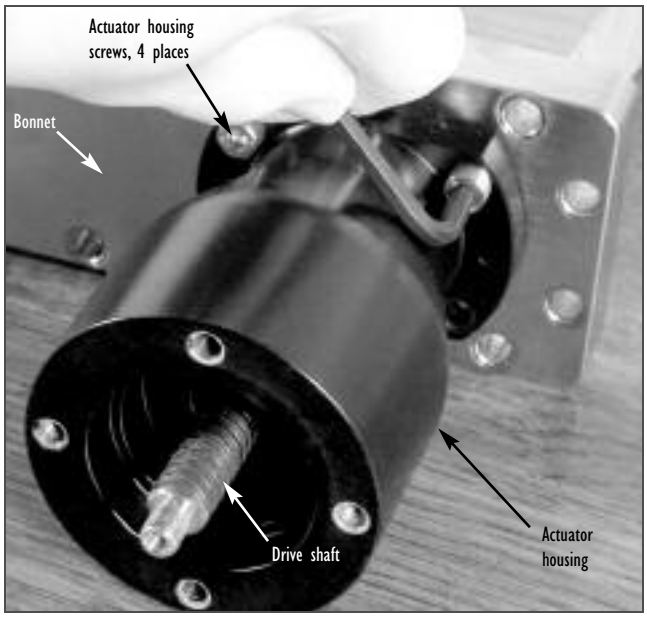

Remove four actuator housing screws

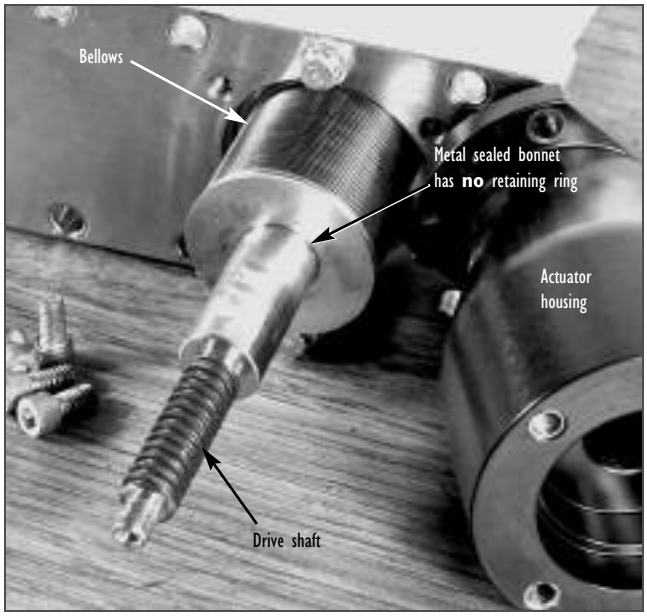

Actuator housing removed — drive shaft and bellows exposed

Bellows & Shaft Seals

Tools and Materials Required

To do this adjustment correctly you will need a vice to hold the assembly

- 1 ¼" Open ended wrench
- Allen wrench set
- Calipers
- O-ring pick, plastic
- R-ring pick
- Needle-nose pliers
- Small standard screwdriver
- Powder-free latex gloves
- Actuator O-rings
- Grease for bellows O-ring: *Apiezon L*
- Vacuum grease
- IPA

- ALWAYS WEAR POWDER-FREE LATEX GLOVES WHEN SERVICING THE VALVE.
- HEAT GUN MAY BE REQUIRED TO MELT ANY *LOCK-TITE* ON JAM NUT THREADS.

Procedure

- Remove ***Bonnet Actuator Carriage Assembly*** per instructions on page 8.
- Remove ***Actuator Knob & Crank*** per instructions on page 10.
- Remove ***Bearing Block*** per instructions on page 12.

1. Remove the remaining screws on the actuator housing, 3/16" Allen wrench.
2. Slide the actuator housing off the drive shaft.
3. *If the valve has a metal sealed bonnet, stop disassembly here.* No further disassembly of the bellows bonnet assembly is possible. The bellows is welded to the drive shaft and to the bonnet plate. No O-rings are inside the bellows.

   If the valve has an elastomer sealed bonnet, go to step 8 on page 16.

Bellows & Shaft Seals

Procedure *(continued)*

The following instructions apply only to metal sealed bonnet models.

4. If the bellows has a leak and must be replaced, call the factory for instructions on returning the unit for replacement.
5. To return only the bellows/bonnet assembly, separate the bellows/bonnet assembly from the gate/carriage assembly by removing the pins on the upper linkage.

   Reconnection of the bellows/bonnet assembly to the gate/carriage assembly is the responsibility of whoever separates the two assemblies.

☛ *HVA recommends returning the entire unit to the factory.*

6. Using a punch and hammer, remove the pin that holds the upper linkage to the lower linkage-upper linkage of Strongback. Inspect the pin assembly and place the punch on the end with the retaining ring.

   Refer to the drawing on page 24 for assembly.

   Note: If the pin does not move, turn the assembly over and try from the other side.

   Discard all pins, washers and retaining rings and replace with all new parts. There should be three washers and a retaining ring recovered along with the pin.

Caution: Be careful not to bend the upper linkage; the use of a wooden block for support is recommended.

7. Reassemble per steps 18–25 on page 17.

☛ For MSB, copper gasket type:

Replace *Bonnet Actuator Carriage Assembly* into valve body install bolts and tighten side to side 20–25 ft-lb.

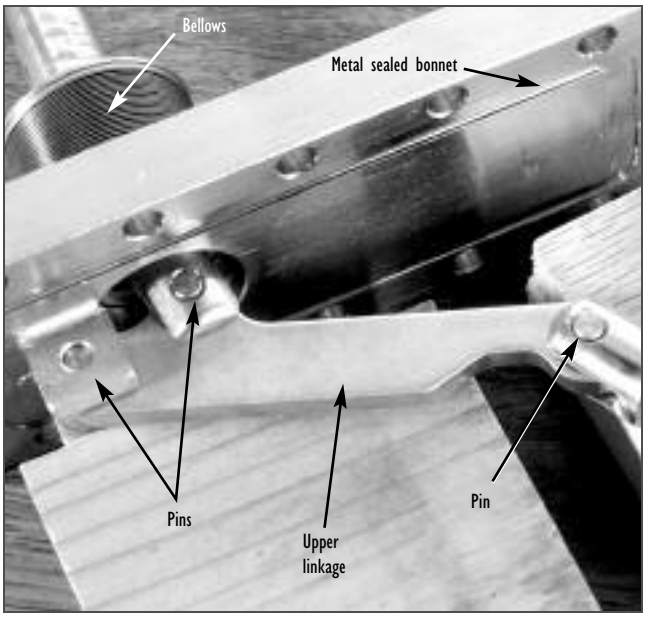

Separate bellow/bonnet assembly from gate/carriage assembly

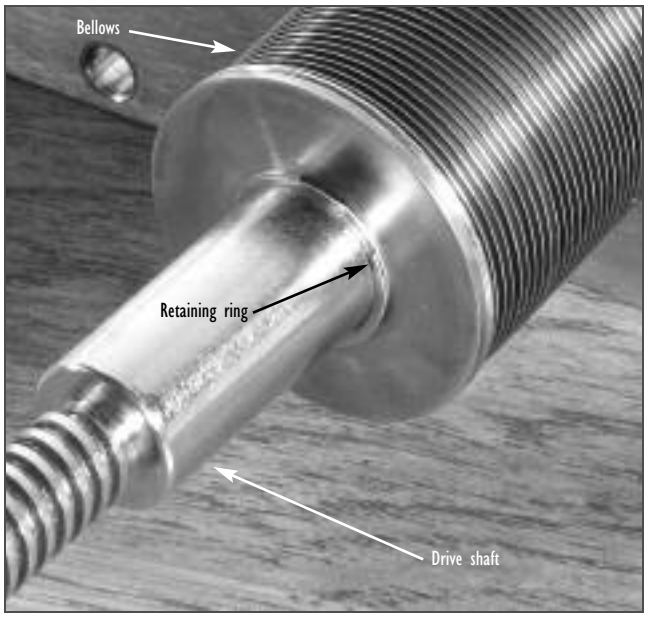

Bellows retaining ring on elastomer sealed bonnet models

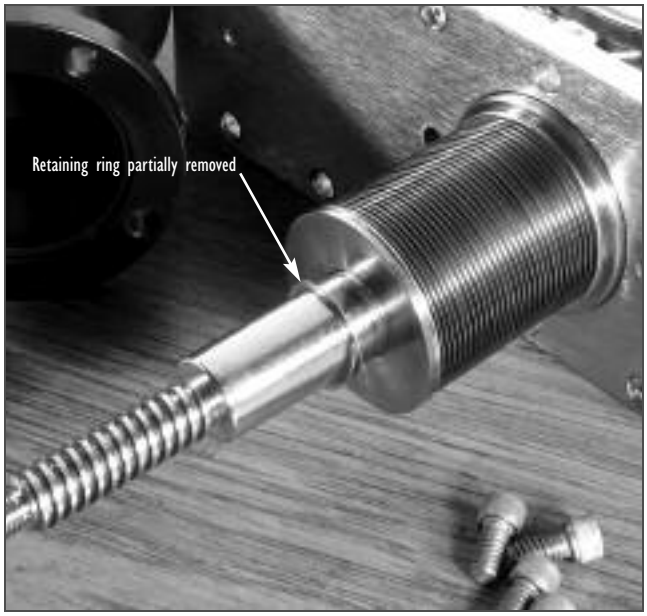

Remove the bellows retaining ring. Discard the retaining ring if a replacement is available.

Bellows & Shaft Seals

Procedure *(continued)*

The following instructions apply only to elastomer sealed bonnet models.

8. Remove R-ring from drive shaft, using a pick. If a replacement is NOT available, use care to preserve the R-ring. Otherwise, pull out using the needle nose pliers and discard.

Bellows & Shaft Seals

Procedure *(continued)*

9. Remove bellows by pulling and twisting slightly. Discard.
10. Remove O-ring in the bellows drive shaft area and discard.
11. Clean drive shaft groove and bellows area with IPA.
12. Apply a thin coat of grease (*Apiezon L*) on the bellows area drive shaft O-ring.
13. Install O-ring.
14. Apply a thin coat of grease (*Apiezon L*) on the O-ring for the bellows base flange.
15. Install O-ring.
16. Replace bellows assembly on the drive shaft, pushing and twisting slightly to go over the O-ring.
17. Install R-ring on the drive shaft, using a screw driver and a pick. Make sure it clicks into the groove next to the top of the bellows.
18. Apply a thin coat of vacuum grease to the drive shaft.
19. Install actuator housing on the bonnet plate (4 screws). Put long screws in before re-attaching actuator housing.
20. Install bearing block assembly onto left-handed ACME screw.
21. Install four bearing block screws.
22. Replace actuator knob and crank. Line up the set screw on the side of the knob with the flat on the drive nut.
23. Install the drive screw stop.
24. Install washer and **left-handed** thread screw in top of drive shaft and tighten.
25. Test operation of valve before re-installing in system.

Twist the bellows slightly to pull free of the O-ring

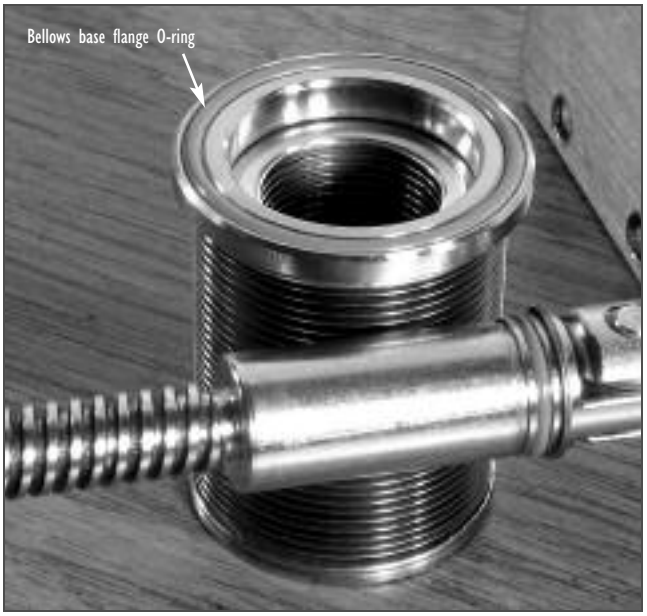

Bellows removed and bellows base flange O-ring exposed

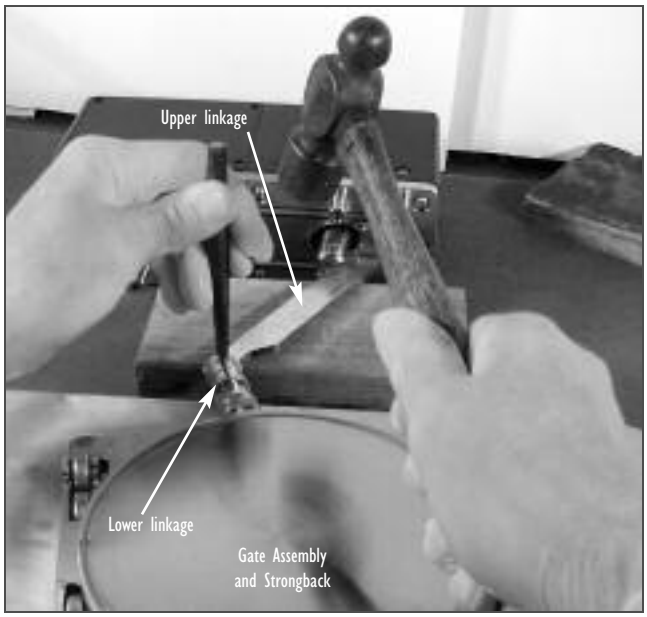

Linkage removal. Discard all used parts. Re-using worn or used parts will lead to operational failure and damage to the valve.

Seal Plate Assembly, Pins & Bearings

4" to 21" sizes only

Tools and Materials Required

- Allen wrench set
- Arbor press
- Punch
- Hammer
- Wrenches, box or open
- Retaining ring pliers
- Calipers
- Vacuum grease: Castrol *Microcote® 296*
- Isopropyl alcohol (IPA)
- Powder-free latex gloves
- Replacement pins, bearings, washers and retaining rings; optional gate spring.

- ALWAYS WEAR POWDER-FREE LATEX GLOVES WHEN SERVICING THE VALVE.
- IF THE PIN DOES NOT COME OUT EASILY, TURN THE ASSEMBLY OVER AND HIT WITH PUNCH ON THE OTHER SIDE.

Procedure

1. Both the station and the pump corresponding to the gate valve should be vented to atmosphere.
2. Actuate valve to **GATE OPEN** position.
3. For safety, do not put hands or objects into gate valve. Serious injury may occur and the valve will be damaged.
4. Remove bolts that hold bonnet actuator assembly to body.
5. Pull out the bonnet actuator carriage assembly.
6. Using a punch and hammer, remove the pin that holds the upper linkage to the lower linkage-upper linkage of Strongback. Inspect the pin assembly and place the punch on the end with the retaining ring.
   Note: If the pin does not move, turn the assembly over and try from the other side.

Seal Plate Assembly, Pins & Bearings

Procedure *(continued)*

Discard all pins, washers and retaining rings and replace with all new parts. There should be three washers and a retaining ring recovered along with the pin.

Caution: Be careful not to bend the upper linkage; the use of a wooden block for support is recommended.

7. Separate the bonnet upper linkage assembly from the carriage assembly.
8. Measure the distance between the Strongback lower linkage and the upper linkage-lower linkage, Dimension C.
   This will be helpful later during reassembly and valve adjustment.

   Record this dimension.

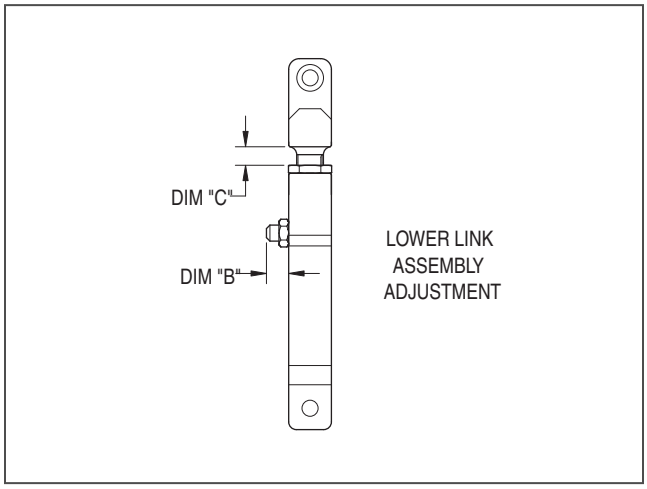

Dimensions B and C, reference page 27

9. For the 6-inch and 8-inch valves, measure the Overcenter Adjustment, Dimension B.

   Record this dimension.
10. Move Carriage assembly to a suitable work place for disassembly and the replacement of pins, bearings and R-rings.
11. Remove gate spring by removing one set screw with an Allen wrench.

    Now the gate can be raised slightly from the Strongback assembly.

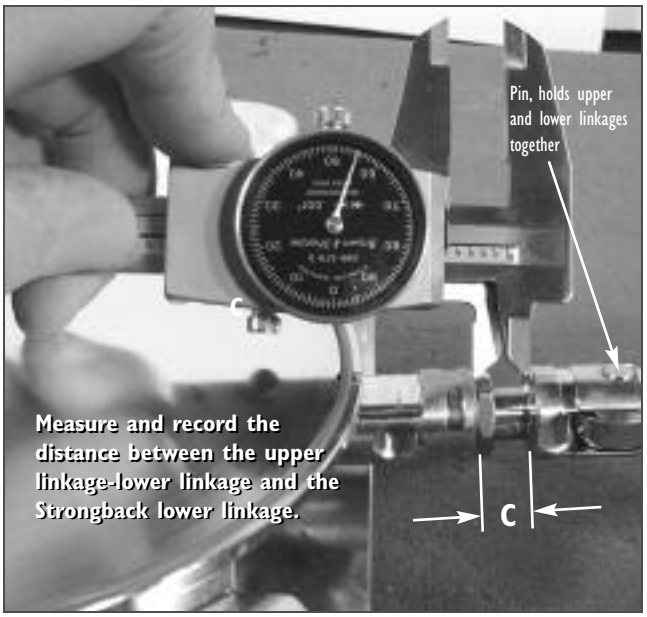

Pin and linkage close-up

Remove set screw to access the gate spring

Gate spring and set screw

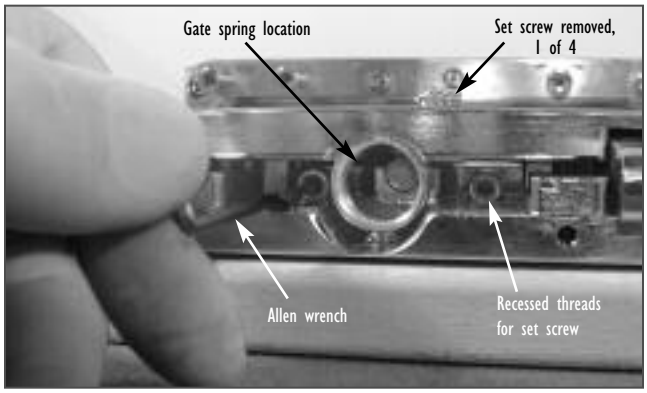

Remove set screws under the gate, two each end

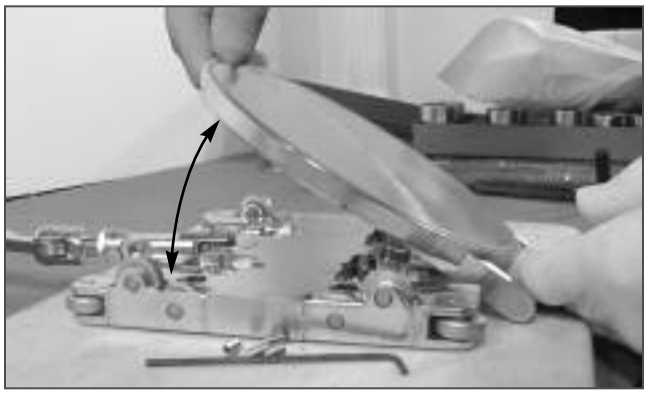

Separate gate from Strongback like opening a book

Seal Plate Assembly, Pins & Bearings

Procedure *(continued)*

12. Remove four Allen set screws that mount the gate to the Strongback. They are accessible under the gate, two each end, top and bottom.

13. Separate gate from Strongback. Peel off the gate from the Strongback as if opening a book with the bottom of the assembly as the spine of the book.

Seal Plate Assembly, Pins & Bearings

Procedure *(continued)*

14. Remove set screws, links, washers, pins, and carriage bars. Discard all used parts, except the carriage bars. Re-using worn or used parts will lead to operational failure and damage to the valve.
15. Using a punch and hammer, remove pins from wheels. Before punching, inspect the pin assembly and place the punch on the end with the retaining ring.
    Note: If the pin does not move, try from the other side.
16. Using an arbor press, remove the bearings from the links and wheels. Discard expendable parts.
17. Clean all reusable parts such as the gate, Strongback, links, carriage bars, and gate spring with IPA.
18. Press new bearings in using an arbor press. For Viton® bonnet sealing valves, ensure that the bearings are properly lubricated with the appropriate vacuum grease (Castrol *Microcote® 296* recommended). For copper sealed bonnet valves run bearings dry.
19. Verify that all bearings spin freely.

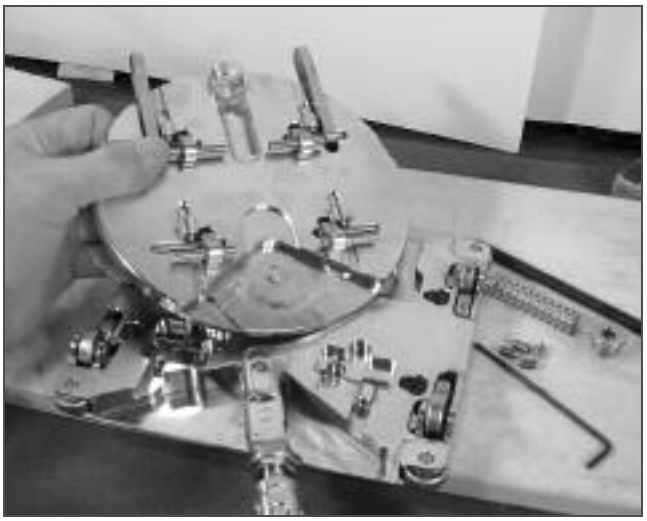

Gate separated from Strongback

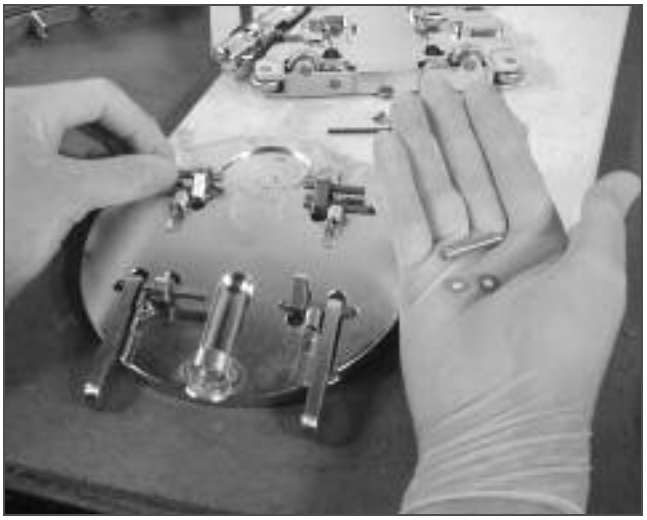

Remove all set screws, links, washers, pins, and carriage bars

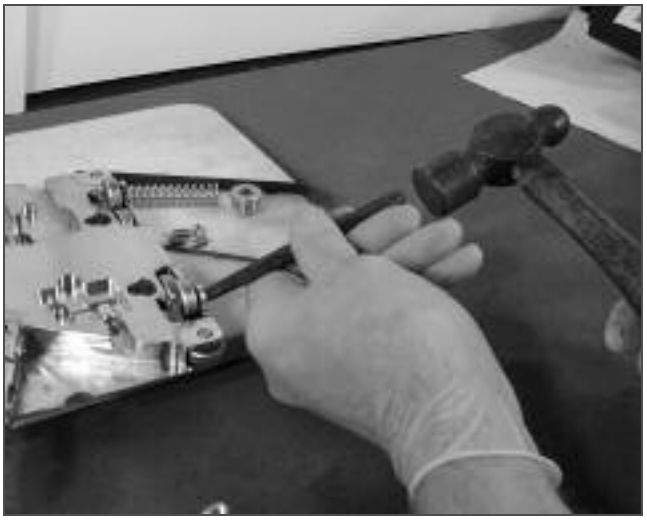

Use a punch and hammer to remove wheels from pins

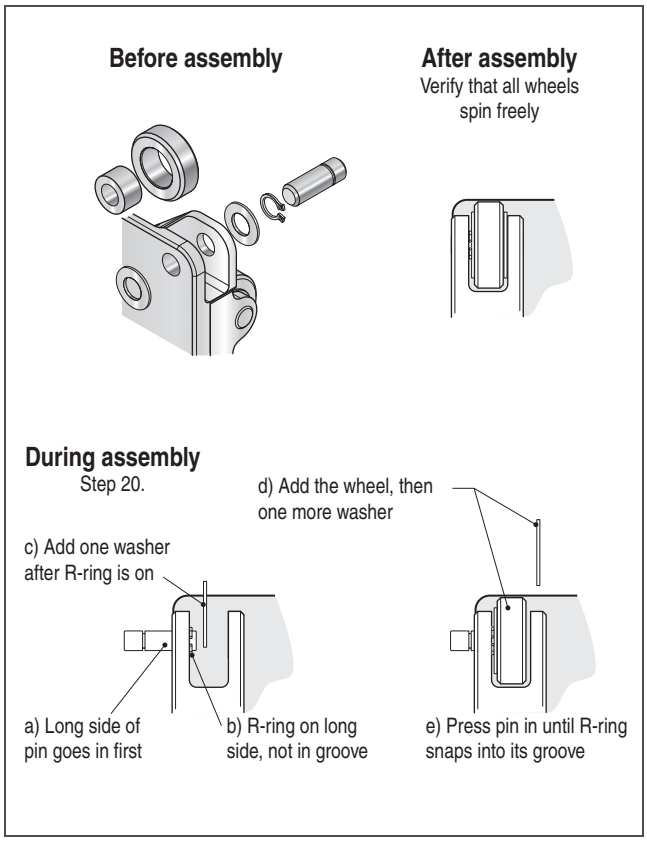

Pins, washers and R-ring reassembly drawing

Seal Plate Assembly, Pins & Bearings

Procedure *(continued)*

20. Install washers, pins and R-rings into Strongback. *The recommended technique is as follows:*

    a) Slide long side of pin through hole first (the side without the groove);

    b) Install R-ring close to the end of the pin, not in the groove;

    c) Add one washer;

    d) Add the wheel, then one more washer;

    e) Push pin in until the R-ring snaps into its groove.

21. Verify that all wheels spin freely.
22. Set Strongback aside for later assembly.
23. Install links, washers, and pins into gate slots. Use a small amount of *Microcote® 296* on washers to make them stick to the links during assembly.
24. Adjust pins to correspond to Strongback pin pockets. Align the pins so they will be in the center of each slot when the gate lies on the Strongback.
25. Install gate to Strongback and verify that all pins fit into Strongback pockets.
26. Install four new set screws under the gate which were removed in step 12. Watch to see that the gate does not rise up when the set screws are tightened.

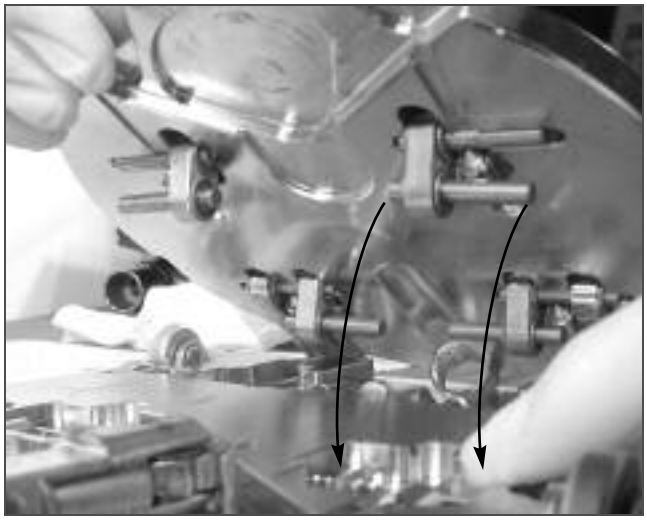

Visually position pins to match Strongback pin pockets

Seal Plate Assembly, Pins & Bearings

Procedure *(continued)*

27. Verify that the gate is flush with the Strongback in the down position and moves freely up and down.
28. Install gate spring. This may require pressure to compress the spring.
29. Install and tighten set screw removed in step 11.

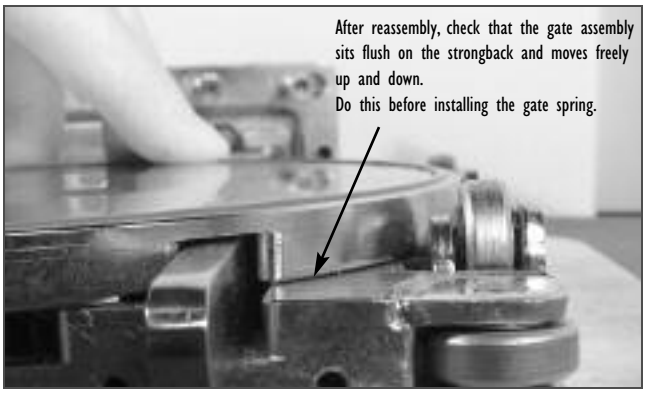

Gate and Strongback assemblies after reassembly

Verify free movement of gate

Install the gate spring

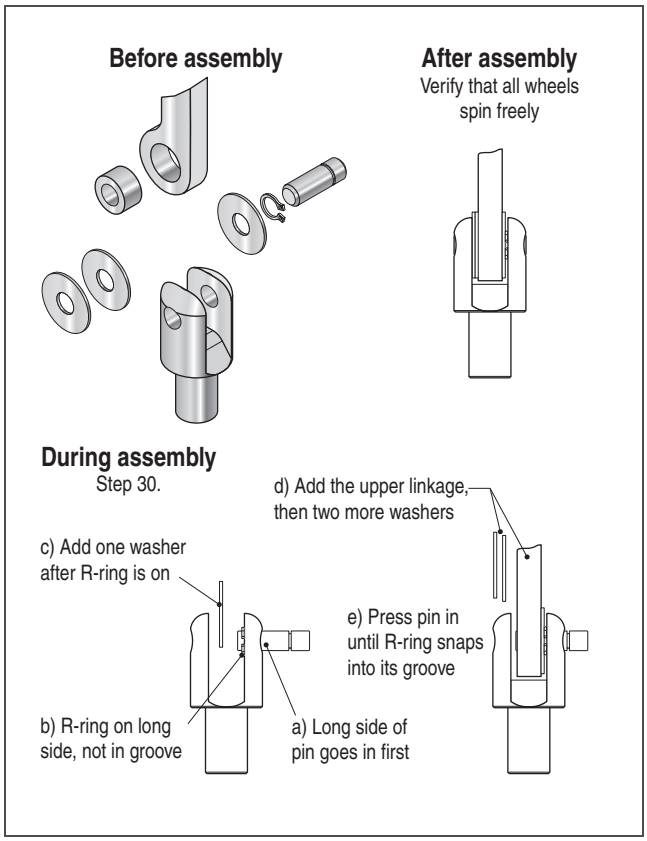

Pins, washers and R-ring reassembly drawing

Seal Plate Assembly, Pins & Bearings

Procedure *(continued)*

30. Reattach upper linkage to Strongback lower linkage-upper linkage.

    The recommended technique is as follows:

    a) Slide long side of pin through hole first (the side without the groove);

    b) Install R-ring close to the end of the pin, not in the groove;

    c) Add one washer;

    d) Add the upper link, then the other two washers;

    e) Push pin in until the R-ring snaps into its groove.

31. Verify that the link moves freely.

33. Verify the measurement in step 8, and adjust as necessary.

    The Bonnet Actuator Carriage Assembly can now be reinstalled into the valve body

34. Replace complete assembly into valve body.

35. Tighten bolts.

36. Test valve operation.

37. If necessary, refer to the Valve Adjustment Procedure on page 26.

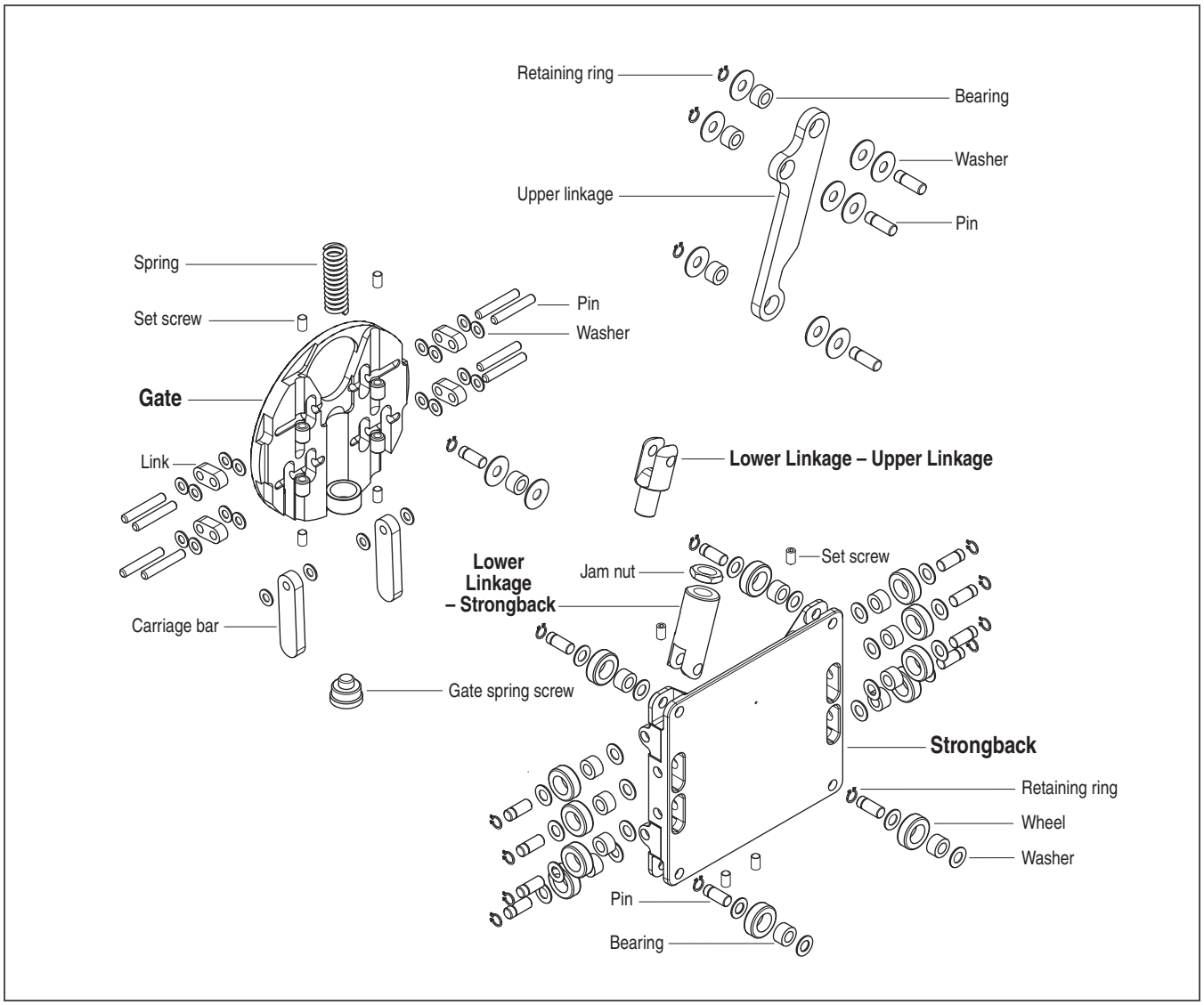

Gate and Strongback assembly

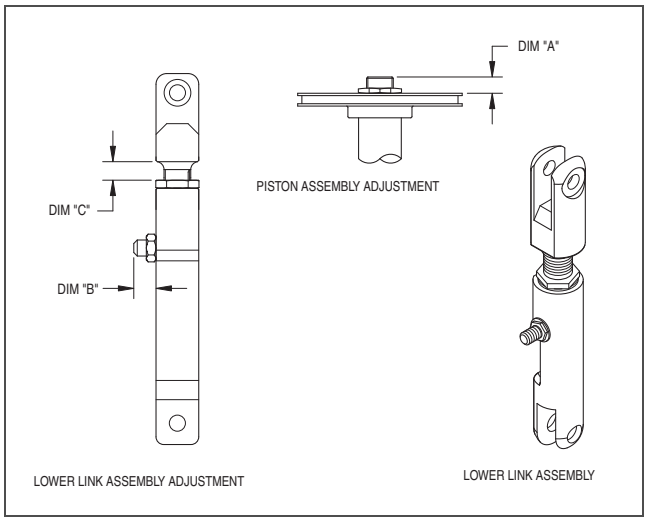

Dimensions A, B and C

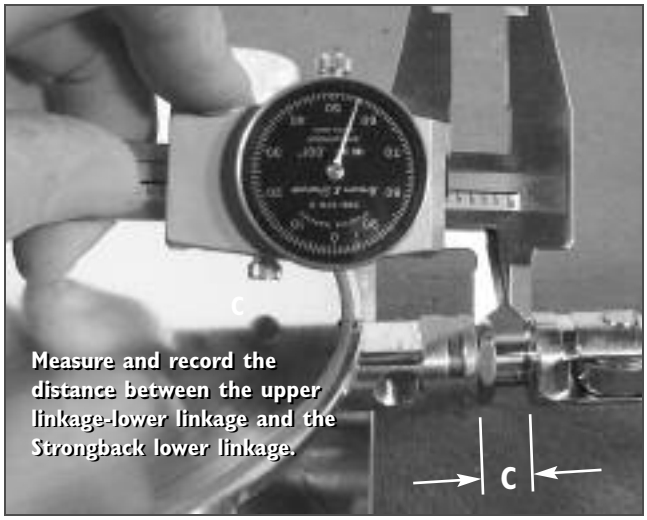

Dimension C

Valve Adjustment

Compression
1½" to 21" sizes

Tools and Materials Required

- Allen wrench set
- Wrench set, box or open
- Calipers
- Replacement gasket or O-ring
- Powder-free latex gloves

- ALWAYS WEAR POWDER-FREE LATEX GLOVES WHEN SERVICING THE VALVE.
- WARNING: NEVER PUT HANDS OR ANY OTHER OBJECT IN THE GATE VALVE - SERIOUS INJURIES WILL OCCUR AND VALVE WILL BE DAMAGED.

Compression Adjustment Procedure

1. Open gate valve. Either remove valve from system or vent system to atmosphere.

■ Remove ***Bonnet Actuator Carriage Assembly*** per instructions on page 8.

2. Adjust linkage per adjustment chart on page 27. Loosen nut using 5/16" wrench and re-tighten.
3. Replace bonnet bellows assembly onto body, using two bolts, one on opposite ends of bonnet plate.
4. When gate compression is correct, remove actuator-bonnet carriage making sure that 5/16" nut is tight.

NOTE: When valve is adjusted properly, you will hear and feel a small click as the valve locks into place.

Valve Adjustment

Procedure *(continued)*

Valve Adjustment Chart	
Valve Size	Dimension C Compression Adjust
1.50	.210
2.00	.360
2.50	.190
3.00	.390
4.00	.420
6.00	.350
8.00	.260
10.00	.720
10.75	.550
12.00	.550
14.00	—
16.00	.540
18.00	—
21.00	—
ALL DIMENSIONS IN INCHES	

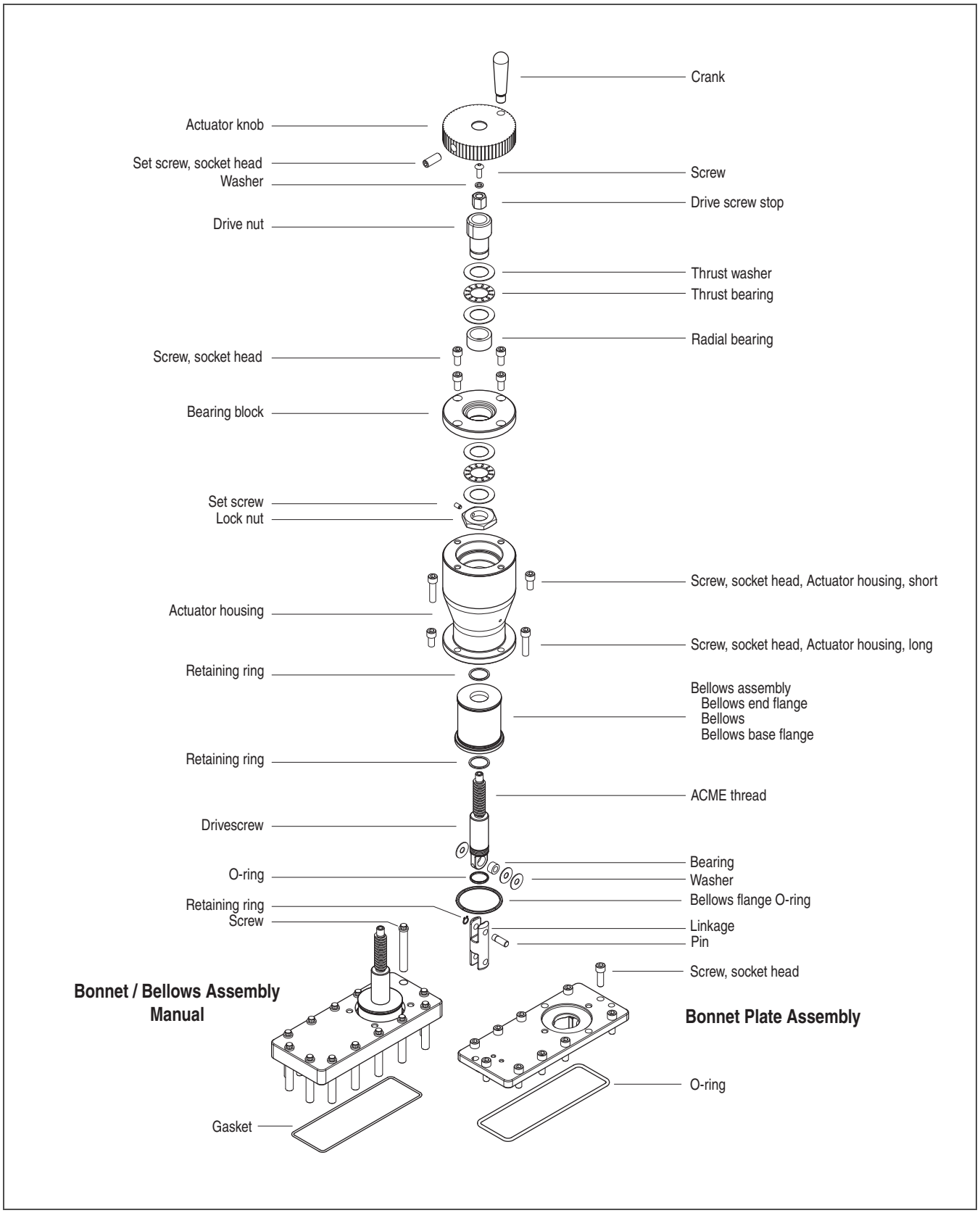

Manual Actuator Assembly

CONTACT

Call the toll free number prior to returning the item.

Company _____

Address _____

City, St Zip _____

Country _____

PO Number _____

SO Number _____

Purchase Date _____

_____
Return Material Authorization Number

Date _____

Contact _____

Telephone _____

Fax _____

Email _____

PRODUCT

Model Number _____

Serial Number _____

DESCRIPTION

Describe any problems _____

_____

_____

_____

_____

_____

_____

_____

_____

_____

_____

RETURN TO

Return a copy of this form along with the product to:

HVA RMA# _____
12880 Moya Boulevard
Reno NV 89506
U.S.A.

A Return Material Authorization number must be legibly marked on the outside of the shipping box.

Telephone: 1-775-359-4442
Toll free: 1-800-551-4422
Facsimile: 1-775-359-1369
Email: sales@highvac.com

Glossary

AM-350 a grade of stainless steel used in welded bellows

B.C. bolt circle diameter

CDA compressed dry air

CF-F a standardized metal sealed flange, compatible with Conflat® flanges

CCW counterclockwise

CW clockwise

Dia. or dia. diameter

Est. or est. estimated

Flg Flange

ft-lb US system measurement of torque

HV high vacuum

Hz Hertz, a measure of frequency

I.D. or ID inside diameter

IPA Isopropyl alcohol

ISO International Standards Organization

JIS Japanese Industrial Standard

KF kleinflansch (German), the smaller of the ISO line of clamping flanges

mA milliamp, a measure of electrical current

Man. manual, as in a manually operated valve

MSB metal seal bonnet

MSDS Material Safety Data Sheet

N/A Not Applicable

NW nenn weite (German), nominal diameter

No Overcenter valve is not adjusted to mechanically lock over center

OAH overall height

O.D. or OD outside diameter

OEM original equipment manufacturer

OFHC oxygen-free high conductivity, a grade of copper that is non-contaminating, used in gaskets for metal seal flanges and valve bonnets

Overcenter valve is adjusted to mechanically lock over center

P.I. Position indicator

Pneu. pneumatic

PSI pounds per square inch, US system measurement of pressure

psig pounds per square inch, gauge, a measure of air pressure relative to atmosphere

RMA Return Material Authorization
Note: Returned goods will not be accepted without an RMA number clearly visible on the outside of the shipping carton.

R-R or R-ring retaining ring

S/H Socket head

STD standard, elastomer sealed bonnet

Strongback Assembly the supporting transport mechanism behind the gate

SW switch

TDS Technical Data Sheet

UHV ultrahigh vacuum

UNF Unified National Fine, thread description

VAC alternating current voltage

VDC direct current voltage

Viton® elastomer O-rings used in standard valves

Contact Information

Please call, email, or fax in your questions to HVA at:

Telephone (toll free): 1-800-551-4422

Local: 1-775-359-4442

Email: sales@highvac.com

Facsimile: 1-775-359-1369

Mailing address: 12880 Moya Boulevard
Reno NV 89506
U.S.A.

Product Warranty

Each product sold by HVA, LLC (HVA) is warranted to be free from manufacturing defects that adversely affect its normal functioning during the one-year immediately following delivery thereof by HVA (or in the case of products or components of any product purchased by HVA from another for any lesser period of time that such manufacturer warrants said product or component to HVA).

Not withstanding the warranty provisions set forth above, all of HVA's obligations with respect to such warranties shall be contingent on licensee's use of the licensed programs in accordance with HVA's instructions as provided by HVA in the documentation or otherwise, and as may be amended, supplemented, or modified by HVA from time to time. HVA shall have no warranty obligations with respect to any product which has been:

A. Operated by purchaser in a manner inconsistent with requirements set forth in the documentation or under the provisions of this agreement or that has been modified or repaired by any party other than HVA;

B. Damaged in any manner and by any cause other than the act or omission of HVA; or,

C. Operated or maintained in environmental conditions outside the parameters designated by HVA in the documentation or elsewhere.

HVA shall not be liable for any damage, loss or expense, whether consequential, special, incidental, direct or otherwise caused by, arising out of or connected with the manufacture, delivery (including any delay in, or failure to, deliver), packaging, storage or use of any product sold or delivered by HVA, whether or not resulting from negligence or from breach of contract except that in the event that any product so sold or delivered by HVA shall fail to conform to the foregoing warranty, the purchaser, as its exclusive remedy, shall upon prompt notice to HVA of any such defect or failure and upon the return of the product, part of component in question to HVA at its factory, with transportation charges prepaid, and upon HVA's inspection confirming the existence of any defect inconsistent with said warranty or any such failure, be entitled to have such defect or failure cured at HVA's factory and at no charge therefore, by replacement or repair of such product as HVA may elect.

The warranties stated are the sole and exclusive warranties offered by HVA. There are no other warranties respecting the products provided hereunder, either express or implied, including but not limited to any warranty of design, merchantability, or fitness for a particular purpose, even if HVA has been informed of such purpose. No agent of HVA is authorized to alter or exceed the warranty obligations of HVA as set forth herein.

Warranty Repairs

If a unit requires service, call HVA to discuss the problem. Prior to returning a unit, a Return Material Authorization number must be assigned by HVA. That RMA number must be legibly marked on the outside of the shipping box. Place the unit in a clean plastic bag to protect the unit from packing materials. Package the unit in its original box or an equivalent one. Cushion the unit securely to prevent damage during shipping. After obtaining an RMA number, complete the Service Report on page 29. Return a copy of the Service Report along with the unit.

If a unit is received damaged or dirty due to improper packaging, it will be necessary for HVA to charge the customer for the additional cleaning or repair required. Any product received that does not comply with the above instruction is subject to return at the customer's expense. If you have any questions regarding the above, please call (775) 359-4442.

Non-Warranty Repairs

If repairs are needed after the warranty period expires, call HVA to discuss the problem. Refer to the above Warranty Repairs information for return procedures. Repairs are warranted for 90 days.

Copyright © 2009 HVA, LLC. All rights reserved. No part of this catalog may be reproduced, copied or transmitted in any form or by any means electronic or mechanical, including photocopying, recording, taping, or by an information storage and retrieval system, in English or in other languages, without written permission from the publisher.

Document 11000.1M
April 2009

HVA, LLC
12880 Moya Boulevard
Reno, Nevada 89506
U.S.A.