A PASSION FOR PERFECTION

PFEIFFER VACUUM

HiCube Classic

Turbo pumping station

Operating Instructions

EN

Translation of the original instructions

PT 0264 BEN/D (1312)

Table of contents

1 About this manual . . . 4
1.1 Validity . . . 4
1.2 Conventions . . . 4
2 Safety . . . 6
2.1 Safety precautions . . . 6
2.2 Protective equipment . . . 7
2.3 Proper use . . . 7
2.4 Improper use . . . 8
3 Transport and storage . . . 9
3.1 Transport . . . 9
3.2 Storage . . . 9
4 Product description . . . 10
4.1 Product identification . . . 11
4.2 Function . . . 11
4.3 Range of application . . . 12
5 Installation . . . 13
5.1 Set-up . . . 13
5.2 Preparatory work . . . 13
5.3 Earthing . . . 14
5.4 Anchoring the pumping station . . . 14
5.5 Connecting the high vacuum side . . . 15
5.6 Connecting the exhaust side . . . 15
5.7 Connecting an external turbopump . . . 15
5.8 Transportation lock . . . 16
5.9 Filling up the operating fluid . . . 17
5.10 Connecting accessories . . . 17
5.11 Connecting to the mains power supply . . . 19
6 Operation . . . 20
6.1 Commissioning . . . 20
6.2 Operation modes . . . 20
6.3 Function description . . . 20
6.4 Saving energy . . . 21
6.5 Operation with gas ballast valve . . . 21
6.6 Operation with fore-vacuum valve . . . 22
6.7 Switching off and venting . . . 22
7 Maintenance / replacement . . . 23
7.1 Maintenance intervals and responsibilities . . . 23
7.2 Removal of components for their maintenance . . . 23
7.3 Changing the operating fluid . . . 26
8 Decommissioning . . . 27
8.1 Shutting down for longer periods . . . 27
8.2 Re-starting . . . 27
8.3 Disposal . . . 27
9 Malfunctions . . . 28
9.1 Rectifying malfunctions . . . 28
10 Service . . . 29
11 Spare parts . . . 30

12 Accessories 30
13 Technical data 31
13.1 General 31
13.2 HiCube 80 Classic 31
13.3 HiCube 300 Classic 32
13.4 HiCube 400 Classic 32
13.5 HiCube 700 Classic 33
14 Dimensions 34
Declaration of conformity 35

1 About this manual

1.1 Validity

This operating manual is for customers of Pfeiffer Vacuum. It describes the functioning of the designated product and provides the most important information for safe use of the unit. The description follows applicable EU guidelines. All information provided in this operating manual refers to the current state of the product's development. The documentation remains valid as long as the customer does not make any changes to the product.

Up-to-date operating instructions can also be downloaded from www.pfeiffer-vacuum.com.

Applicable documents

HiCube Classic	Operating instructions
Declaration of Conformity	Part of this document
Operating instructions for components	see product description*

*also available via www.pfeiffer-vacuum.com

1.2 Conventions

Safety instructions

The safety instructions in Pfeiffer Vacuum operating instructions are the result of risk evaluations and hazard analyses and are oriented on international certification standards as specified by UL, CSA, ANSI Z-535, SEMI S1, ISO 3864 and DIN 4844. In this document, the following hazard levels and information are considered:

DANGER

Imminent danger
Indicates an imminent hazardous situation that will result in death or serious injury.

WARNING

Possibly imminent danger
Indicates an imminent hazardous situation that can result in death or serious injury.

CAUTION

Possibly imminent danger
Indicates an imminent hazardous situation that can result in minor or moderate injury.

NOTICE

Command or note
Command to perform an action or information about properties, the disregarding of which may result in damage to the product.

Pictographs

Prohibition of an action or activity in connection with a source of danger, the disregarding of which may result in serious accidents

Warning of a displayed source of danger in connection with operation of the unit or equipment

Command to perform an action or task associated with a source of danger, the disregarding of which may result in serious accidents

Important information about the product or this document

Instructions in the text

➔ Work instruction: here you have to do something.

Abbreviations used

DCU:	Display Control Unit
HPU:	Handheld Programming Unit
TC:	Electronic drive unit for turbopump
TPS:	Mains pack

Symbols used

The following symbols are used consistently throughout the diagrams:

- High vacuum flange
- Fore-vacuum connection
- Electric connection
- Air cooling unit
- Venting connection
- Sealing gas connection
- Exhaust connection

2 Safety

2.1 Safety precautions

Duty to inform

Each person involved in the installation, operation or maintenance of the pumping station must read and observe the safety-related parts of these operating instuctions and the components instructions.

➔ The operator is obligated to make operating personnel aware of dangers originating from the vacuum pump, the pumped medium or the entire system.

NOTICE

Checking the safety system against excess rotation speed

To provide the functioning of the integrated safety system for avoiding excess rotation speed, the pump must run-up from the standstill at least once a year.

➔ Switch off the pump and await the complete standstill (rotation speed = 0 Hz).

➔ Run-up the pump according to this operating instructions.

WARNING

Danger of unsafe electrical installation

Safe operation after installation is the responsibility of the operator.

➔ Do not independently modify or change the pump and electrical equipment.

➔ Make sure that the system is integrated in an emergency off safety circuit.

➔ Consult Pfeiffer Vacuum for special requirements.

WARNING

Danger of electric shock

In case of defect, the parts connected to the mains supply are under voltage.

➔ Always keep the mains connection freely accessible so you can disconnect it at any time.

WARNING

Danger of electric shock

The pumping station is only free of voltages when the mains plug has been disconnected.

➔ Switch off the master switch and disconnect the mains plug before all work.

➔ Secure against unintentional restarting.

- Do not expose any body parts to the vacuum.
- Observe all safety and accident prevention regulations.
- Regularly check the proper observance off all safety measures.
- Always ensure a safe connection to the protective earthing conductor (PE, protection class I).
- Do not loosen any plug connection during operations.
- Wait for the rotor to reach standstill before peforming work on the high vacuum flange.
- Keep leads and cables well away from hot surfaces (> 70 °C).
- Never fill or operate turbopump with cleaning agent.
- Do not operate the turbopump with open high vacuum flange.
- Do not carry out any unauthorised modifications or conversions to the pumps.
- The unit has been accredited with protection class IP 20. Take necessary measures when installing into ambient conditions, which afford other protection classes.

2.2 Protective equipment

Determined situations concerning the handling of vacuum pumps require wearing of personal protective equipment. The owner, respectively the employer are obligated to provide adequate equipment to any operating persons.

DANGER

Danger to health by hazardous substances during maintenance or installation

Depending on the process vacuum pumps, components or operating fluids can be contaminated by toxic, reactive or radioactive substances.

➔ Wear adequate protective equipment during maintenance and repairs or in case of reinstallation.

WARNING

Risk of injury through falling objects

When transporting vacuum pumps by hand, there is a danger through loads slipping and falling down.

➔ Carry small and mid-size vacuum pumps two-handed.
➔ Carry vacuum pumps > 20 kg by a suitable lifting device.
➔ Wear safety shoes with steel toe cap according to directive EN 347.

CAUTION

Risk of injury through hot surfaces

Vacuum pumps can become hot during operation.

➔ Allow the pump to cool before maintenance and repairs.
➔ If necessary wear protective gloves according to directive EN 420.

CAUTION

Risk of injury through sharp edges

Rotor and stator disks of turbopumps have very sharp edges.

➔ Before any working wait for the complete standstill of the pump.
➔ Do not reach in the high vacuum flange.
➔ If necessary wear protective gloves according directive EN 420.

2.3 Proper use

NOTICE

EC conformity

The manufacturer's declaration of conformity becomes invalid if the operator modifies the original product or installs additional components.

➔ Following installation into a plant and before commissioning, the operator must check the entire system for compliance with the valid EU directives and reassess it accordingly.

- Only use the pumping station for creating vacuum.
- Only operate the pumping station as an entire unit.
- Only use the pumping station for evacuation of dry and inert gases; other applications only after consultation with Pfeiffer Vacuum.

2.4 Improper use

Improper use will cause all claims for liability and warranties to be forfeited. Improper use is defined as usage for purposes deviating from those mentioned above, especially:

- pumping of corrosive or explosive media
- pumping of condensing vapors
- pumping of liquids
- pumping of dusts
- operation with improper high gas throughput
- operation with improper high fore-vacuum pressures
- operation with improper high levels of insulated heat input
- operation in improper high magnetic fields
- operation with improper gas mode
- venting with improper high venting rates
- use of the vacuum pump to generate pressure
- operation of the devices in areas with ionizing radiation
- operation in potentially explosive areas
- use of the devices in systems in which impact-like stress and vibrations or periodically forces affect the devices
- use of accessories or spare parts, which are not named in this manual

warranty seal

PFEIFFER VACUUM

Closure seal

The product is sealed at the factory. Damaging or removal of a closure seal leads to the loss of liability and warranty entitlements.

➔ Do not open the product within its warranty period!

➔ For process-related shorter maintenance intervals please contact the Pfeiffer Vacuum Service.

3 Transport and storage

3.1 Transport

WARNING

Danger from falling and swinging loads!

When lifting the pumping station there is a danger of falling parts.

➔ Only fix a lifting device for transport on the provided eye bolts of the high vacuum flange of the turbopump.

➔ Make sure that there are no persons under the suspended load.

➔ Only lift the pumping station with the handles manually.

CAUTION

Risk of injury due to the pumping station's tipping or rolling away

Superstructural parts provided by customer can shift the pumping station's center of gravity, creating a risk of tipping. On inclined planes, there are general risks of tipping and injury due to squeezing from rolling pumping stations.

➔ Do not transport or move pumping stations with superstructural parts.

➔ Do not transport or position a pumping station on inclined planes with a downgrade > 5° (approx. 8.7%).

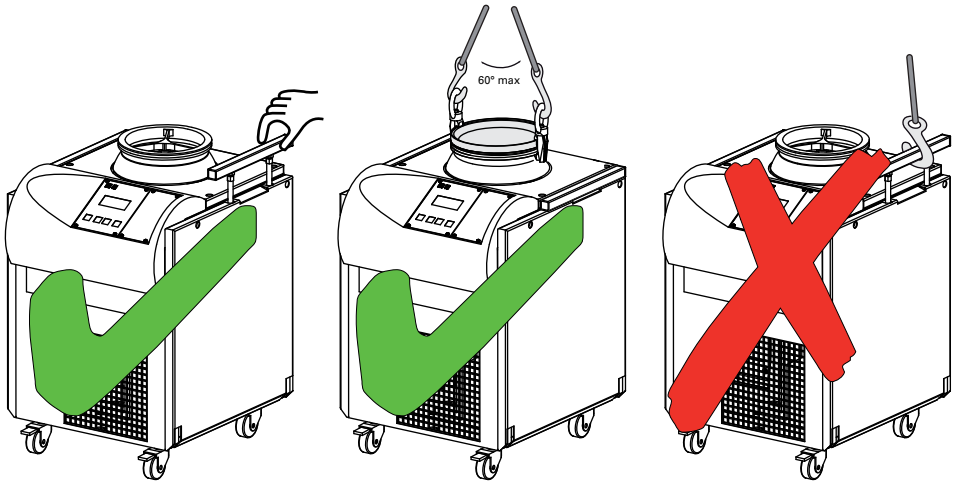

➔ Always transport the pumping station uprightly and as even as possible.

➔ Keep the original protective covers.

Transportation lock

The backing pump of the pumping station HiCube Classic is secured against damage during transport *(see p. 16, chap. 5.8)*.

➔ Follow instructions concerning the installation location!

➔ Before putting into operation loosen the backing pump's transportation lock device at the installation location.

3.2 Storage

➔ Close the flange openings by using the original protective covers.

➔ Close further connection ports by using the corresponding protective covers.

➔ Only store the pumping station indoors at an ambient temperature between -10 °C and +40 °C.

➔ In rooms with moist or aggressive atmospheres, the pumping station must be airproof shrink-wrapped in a plastic bag together with a bag of dessicant.

4 Product description

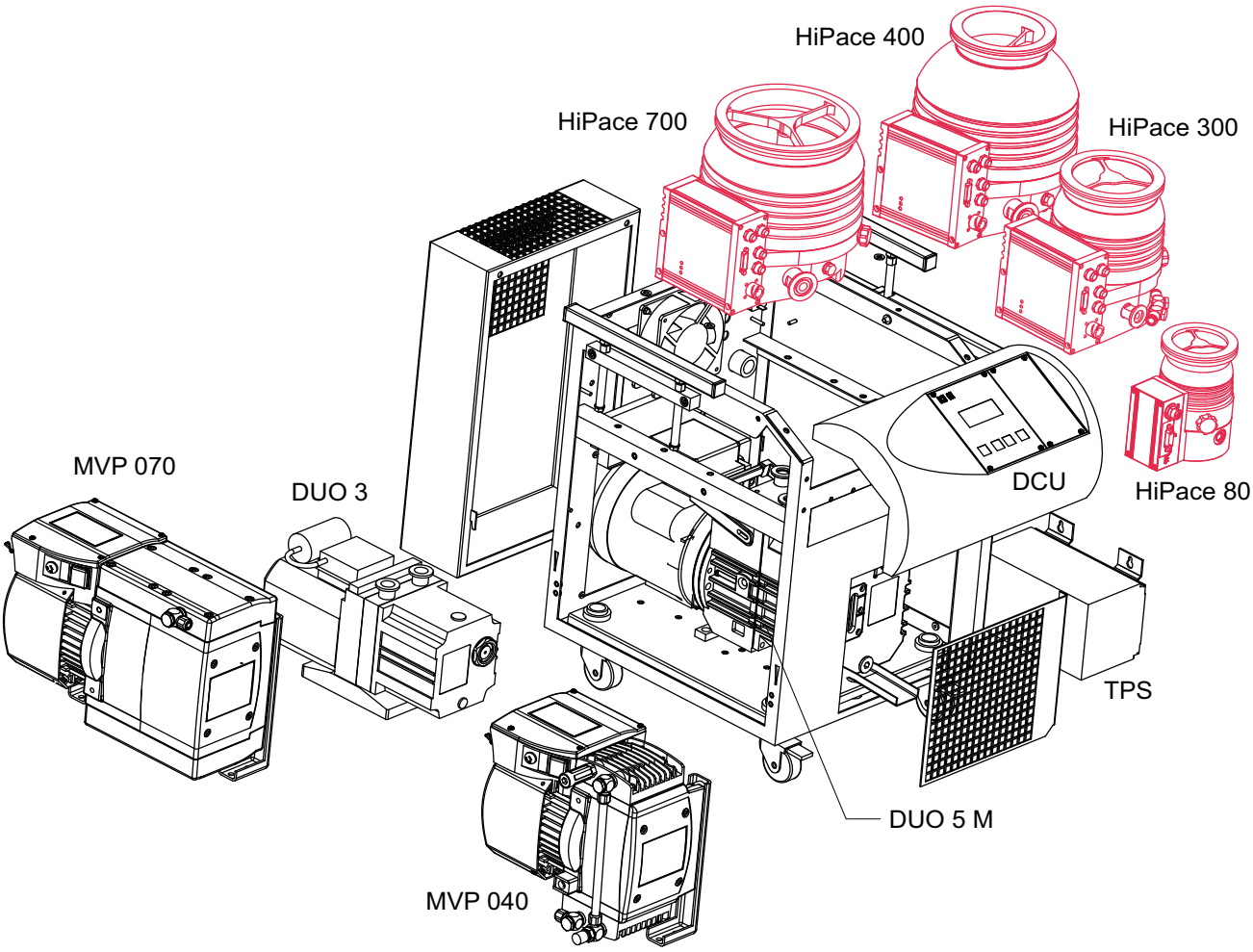

Feature	HiCube Classic				Operating Instructions
HV flange	DN 40 / DN 63	DN 100		DN 160	
Turbopump	HiPace 80	HiPace 300	HiPace 400	HiPace 700	PT 0208 BN PT 0200 BN PT 0209 BN PT 0210 BN
Electronic drive unit	TC 110	TC 400	TC 400	TC 400	PT 0204 BN PT 0203 BN
Venting valve	yes	yes	yes	yes	PT 0228 BN
Backing pump: diaphragm pump	MVP 040 MVP 070	MVP 040 MVP 070	MVP 040 MVP 070	MVP 040 MVP 070	PU 0050 BN PU 0050 BN
Backing pump: rotary vane pump	DUO 3 DUO 5 M	DUO 3 DUO 5 M	DUO 3 DUO 5 M	DUO 3 DUO 5 M	PD 0060 BN PK 0197 BN
Casing heating (water cooling required)	optional, only with CF flange	optional, only with CF flange	optional, only with CF flange	optional, only with CF flange	PT 0233 BN
Display control unit	DCU 002	DCU 002	DCU 002	DCU 002	PT 0250 BN
Mains pack	TPS 110	TPS 310	TPS 400	TPS 400	PT 0199 BN

Fig. 1: Selection of turbopumps and backing pumps for HiCube Classic

4.1 Product identification

Product characteristics

To correctly identify the product when communicating with Pfeiffer Vacuum, always have the information from the rating plate available.

Fig. 2: Example for a rating plate

Scope of delivery

- HiCube Classic
- Only with rotary vane pump as backing pump: operating fluid and filler tube
- Mains cable
- Grounding cable, 3 m (incl. fixing material)
- Protective cover for the high vacuum flange
- Operating manuals for pumping station and individual components
- Eye bolts

4.2 Function

Turbo pumping stations are fully automatic pump units which are ready for connection. A turbo pumping station consists of a portable or mobile vacuum pumping unit with a turbopump and a specially matched backing pump.

The display and control unit DCU serves to control and monitor the pumping station.

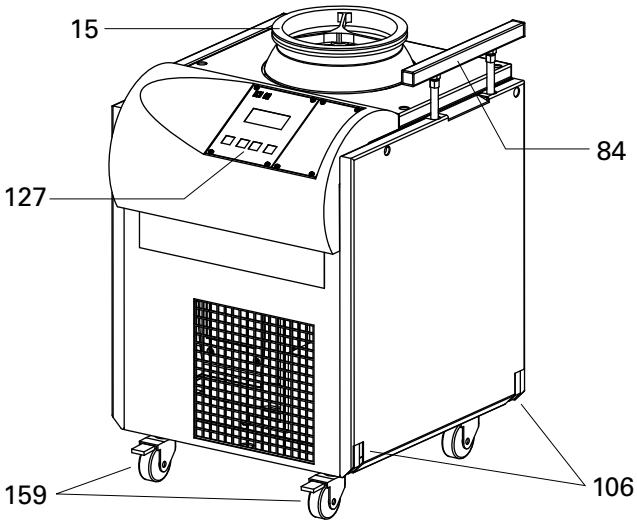

Fig. 3: View of HiCube Classic

15	HiPace turbopump	127	Display and control unit DCU 002
84	Carrying handle	159	Transport roller (optional)
106	Securing hook		

Control

Electronic drive unit of the turbopump

Cooling

- Air cooling
- Water cooling (optional)

In the case of excess temperature the electronic drive unit reduces the drive power automatically.

4.3 Range of application

The pumping station HiCube Classic must be installed and operated in the following ambient conditions.

Installation location	weather protected (indoors)
Protection category	IP 20
Protection class	I
Temperature	+5 °C to +40 °C (up to +35 °C with air cooling)
Relative humidity	max. 80 %, at T ≤ 31 °C, up to max. 50% at T ≤ 40 °C
Atmospheric pressure:	750 hPa - 1060 hPa
Installation altitude	2000 m max.
Degree of pollution	2
Overvoltage category	II
Connection voltage TC	24 or 48 V DC ±5%

Limit values for	HiPace 80	HiPace 300	HiPace 400	HiPace 700
Permissible magnetic field max.	3.3 mT	5.5 mT	6 mT	6 mT
Permissible irradiated heat input	3 W	8 W	14 W	14 W

Remarks to ambient conditions

The specified permissible ambient temperatures apply to operation of the turbopump at maximum permissible fore-vacuum pressure or at maximum gas throughput depending on the cooling method. The turbopump is intrinsically safe by a redundant temperature monitoring.

- By reducing the fore-vacuum pressure or gas throughput, the turbopump can be operated at higher ambient temperatures.
- If the maximum permissible operating temperature of the turbopump is exceeded, the electronic drive unit reduces drive power first and switches off then, if necessary.

5 Installation

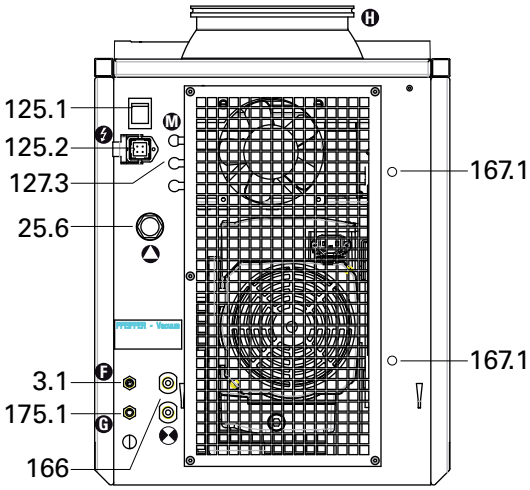

3.1 External venting connection (opt.)
25.6 Exhaust connection
125.1 Main switch
125.2 Mains connection
127.3 Feedthrough measuring cable
166 Cooling water connection
167.1 Connection for dryer
175.1 Sealing gas connection (optional)

Fig. 4: HiCube Classic, connections

5.1 Set-up

The installation location is to be chosen so that components that need servicing are freely accessible at all times. No special foundations or base are necessary for installation. The unit must not be used outdoors. Conditions are:

- the ambient conditions specified for the range of application
- a level, vibration-free surface.
- Distance to side walls or adjacent devices: at least 50 cm.
- Distance to possible edges of tables: at least 10 cm.
- When using a casing heating and a water cooling unit the temperature of the connected flange of the vacuum chamber must not exceed 120 °C.
- It is not allowed to operate the device in systems where impact-like stresses and vibrations or periodically forces occur.

Dismantling the casing panels

For certain activities during the installation, the side panels must be dismantled.

➔ For this, note the instructions in the chapter "Maintenance" *(see p. 23, chap. 7.2)*.

5.2 Preparatory work

➔ Ensure sufficient cooling for the pumping station.

➔ When magnetic fields exceed the approved values, a suitable shielding must be used. Check installation location and consult Pfeiffer Vacuum if needed!

➔ The maximum permissible rotor temperature for the turbopump is 90 °C. If high temperatures arise for process reasons, the radiated heat input must not exceed the permissible values. Install suitable screening sheets, if necessary (design information on request).

5.3 Earthing

NOTICE

Danger of missing casing earthing

To comply with the required height of the leakage currents according to DIN EN 61010-1:2010, perform the following measure:

➔ Connect the earthing cable (consignment) of the pumping station with PE on site, before mains connection.

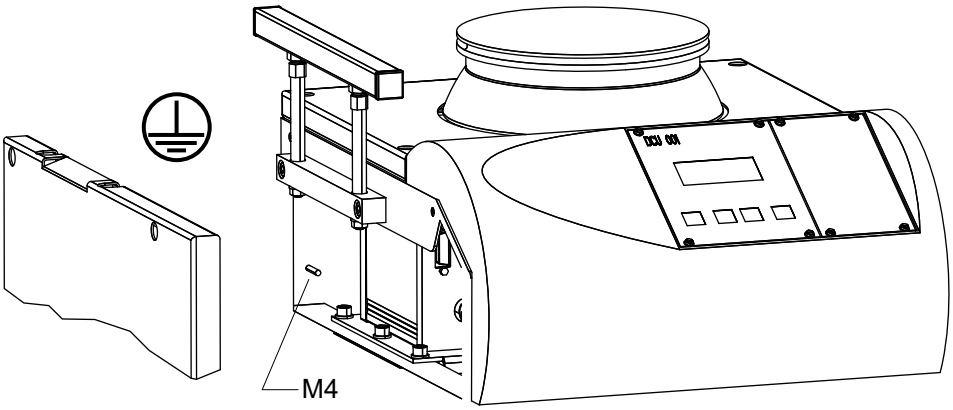

5.4 Anchoring the pumping station

In the case the rotor of the turbopump suddenly blocs, the resulting torque must be absorbed via the pumping station frame by the fixture provided by the customer. Anchoring the pumping station is mandatory in order to secure the pumping station and the vacuum system. For this purpose, there are 4 securing hooks at the lower corners of the pumping station frame.

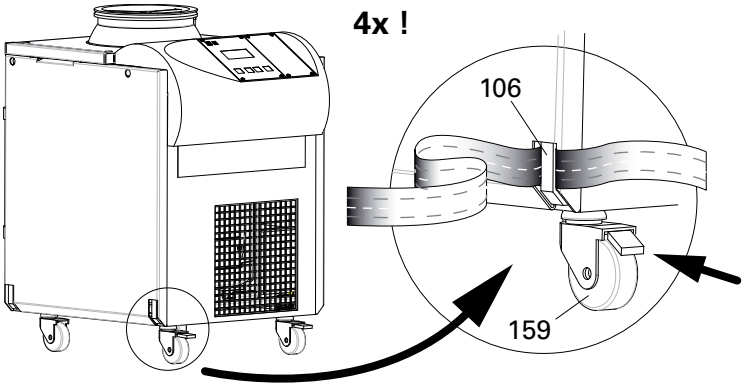

Fig. 5: Anchoring the pumping station

106 Securing hooks 159 Roller

➔ Lock all pumping station roller brakes.

➔ Fasten the pumping station with lashing straps at all 4 securing hooks.

- Pay attention to the fit and the stress of the straps; the strap loop has to be in the recess of the securing hook.
- Fasten securely the lashing straps provided by the the customer in order to be able to hold loads up to 2000 N per anchorage point.

5.5 Connecting the high vacuum side

The assembly of superstructures on the pumping station HiCube Classic is in the operator's responsibility. The load capacity of the high vacuum flange is specific for the used turbopump. The gross weight of superstructures on the pumping station HiCube Classic may **not** exceed 100 kg!

➔ Observe barycentric shifting by using high or lateral protruding superstructure (e.g. vacuum chamber). **Danger of tilting!**

➔ Install the high vacuum flange in accordance with the instructions in the operating manual of the turbopump.

➔ Ensure the greatest possible cleanliness when installing any high vacuum parts. Unclean components prolong the pump-down time.

➔ Observe the minimum strength of 170 N/mm^2 for the flange material.

5.6 Connecting the exhaust side

CAUTION

High pressure in the exhaust line!

Danger of damage to the seals and danger of the pump bursting.

➔ Install the line without shut-off valves on the exhaust side.

➔ Do not operate the pump with excess pressure at the inlet; observe the maximum allowable pressures and pressure differences.

➔ Prepare the exhaust line provided by customer starting from the pumping station's casing.

➔ Choose the cross-section of the exhaust line to be at least the size of the nominal connection diameter of the vacuum pump's exhaust connection.

➔ Piping to the pump must be suspended or supported.

– Physical forces from the piping system must not be allowed to act on vacuum pumps.

➔ Lay piping from the pump sloping downward so that no condensate can flow back into the pump; otherwise fit a condensate separator.

– If an air trap is created in the system, then a device for draining condensation water must be provided at the lowest point.

5.7 Connecting an external turbopump

Depending on the configuration the turbopump can be operated separately from the pumping station. Please observe the following installation information!

➔ Install the turbopump according to its operating instructions.

➔ Open the casing of the pumping station, if necessary.

➔ Extend necessary control leads for the electronic drive unit of the turbopump using Pfeiffer Vacuum accessories.

➔ Connect the control leads to the electronic drive unit.

➔ Install an air cooling unit (accessories) for the external turbopump and connect it to the electronic drive unit.

– Use water cooling optionally.

Operation of the turbopump with the electronic drive unit separate

The operation of the turbopump with a separated electronic drive unit is only possible using the respective Pfeiffer Vacuum accessories.

Installing the high vacuum flange

WARNING

Risk of the turbopump being torn-off

In case of sudden blocking of the rotor, torques of up to 4200 Nm can occur, which can lead with incorrect attachment to tearing the turbopump off. The energy released thereby can hurl the entire pump or fragments from their inside around the area. This can cause severest injuries (possibly resulting in death) and large property damage.

➔ Precisely follow installation instructions.

➔ Only use Pfeiffer Vacuum original components (accessories) for installation.

➔ Install the high vacuum flange in accordance with the instructions in the operating manual of the turbopump.

➔ Ensure the greatest possible cleanliness when installing any high vacuum parts. Unclean components prolong the pump-down time.

➔ Observe the minimum strength of 170 N/mm^2 for the flange material.

Connecting the fore-vacuum side

➔ Extend the fore-vacuum line between turbopump and backing pump.

➔ Connect the fore-vacuum line with small-flange components or threaded hose couplings. Do not narrow the free cross section of the fore-vacuum flange!

➔ With rigid pipe connections: Install bellows for attenuation of vibrations in the connection line.

5.8 Transportation lock

Turbo pumping stations of the HiCube Classic line are equipped with transportation lock for the backing pumps (see label). The transportation lock consists of two opposing knurled screws with spring suspension which fasten the backing pump's bottom plate.

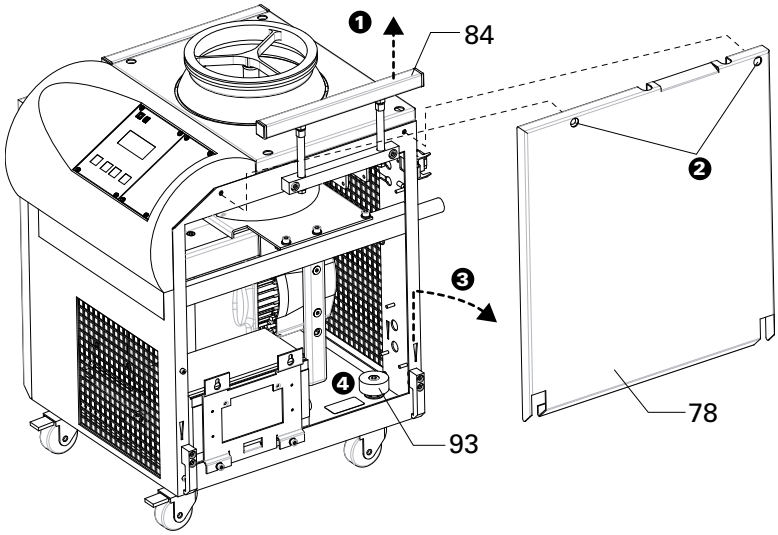

Fig. 6: Transportation lock for HiCube Classic

78	Side panel	84	Handle	93	Transportation lock

➔ Lift the carrying handle.

➔ Loosen two retaining screws each from a side panel.

➔ Remove the side panel:

- Lift the side panel approx. 2-3 cm from its adjustment and tilt it outwards.
- Disconnect the earthing cable from the terminal socket of the side panel.
- Remove the side panel from the pumping station.

➔ Loosen the knurled screw of the transportation lock.

➔ Place the side panel in position.
  – Pay attention to the earthing cable!
➔ Similarly loosen the transportation lock on the opposite side.

5.9 Filling up the operating fluid

Only applies to HiCube with rotary vane pump as backing pump!

- The operating fluid reservoir is already filled and installed for the turbopump.
- The operating fluid for the rotary vane pump is enclosed with the delivery.

➔ Lift the carrying handle.
➔ Loosen two retaining screws each from a side panel.
➔ Remove the side panel:
  – Lift the side panel approx. 2-3 cm from its adjustment and tilt it outwards.
  – Disconnect the earthing cable from the terminal socket of the side panel.
  – Remove the side panel from the pumping station.

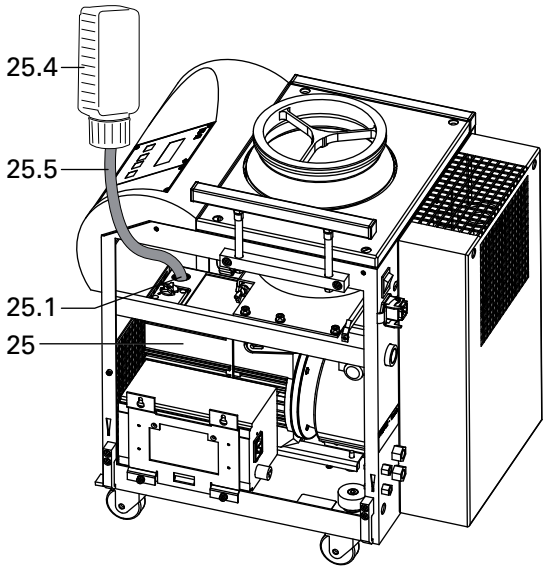

25 Backing pump: rotary vane pump
25.1 Filler opening/Filler screw
25.4 Operating fluid bottle
25.5 Filler tube

Fig. 7: Filling the backing pump with operating fluid

➔ Unscrew operating fluid filler screw 25.1.
➔ Unscrew the operating fluid bottle's screw plug and screw the filler tube (both included in the equipment pack).
➔ Insert the filler tube into the rotary vane pump's filler opening.
➔ Fill operating fluid according to rotary vane pump operating instructions.
➔ Screw in operating fluid filler screw 25.1.
➔ Check fill level: The correct fill level is between the markings on the sight glass.
  – If the fill level drops below the "Min" marking, add operating fluid.
➔ Place the side panel in position.
  – Pay attention to the earthing cable!

5.10 Connecting accessories

Installation and operation of accessories

Pfeiffer Vacuum pumps can be equipped with a series of adapted accessories. The installation, operation and maintenance of connected devices are described in detail in the operating instructions of the individual components.

➔ For information on order numbers of components, see "Accessories".
➔ Use original accessory parts only.

NOTICE

Dangerous excess temperatures

Process-related high temperatures can result in impermissible excess temperatures and thus damage to the turbopump.

➔ Water cooling must be used when employing a casing heating or during operation with heated vacuum chambers.

➔ Do not introduce any additional energy into the pump *(see p. 20, chap. 6.1)*.

- An air cooling unit is integrated in the casing of the pumping station and is suitable for ambient temperatures up to +35 °C.
- A venting valve is installed and connected to the turbopump.

➔ Generally use water cooling if the ambient temperature is > +35 °C.

➔ Connect additional accessories according to the operating manual of the turbopump.

Connecting a measuring device

The connection of a measuring gauge (e.g. Pfeiffer Vacuum ActiveLine) is possible to the display and control unit DCU.

➔ Lift the carrying handle.

➔ Loosen two retaining screws each from a side panel.

➔ Remove the side panel:

– Lift the side panel approx. 2-3 cm from its adjustment and tilt it outwards.
– Disconnect the earthing cable from the terminal socket of the side panel.
– Remove the side panel from the pumping station.

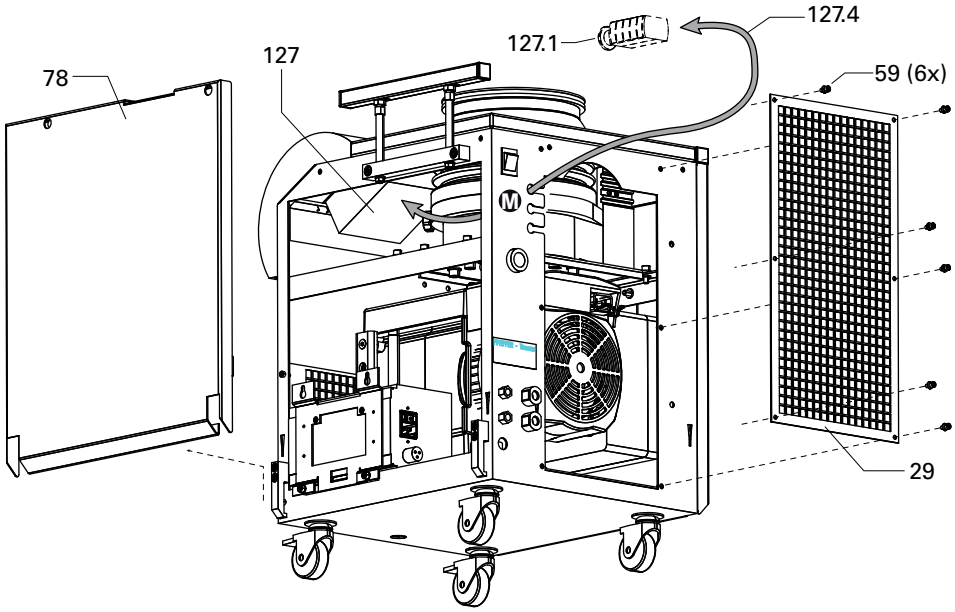

Fig. 8: HiCube Classic, running a measuring cable

29	Perforated plate	78	Side panel	127.1	Measuring gauge
59	Allen head screw	127	Display and control unit	127.4	Measuring cable

➔ Unscrew the retral perforated plate from the casing of the pumping station (6x Allen head screw 59).

➔ Run the measuring cable via the measuring connection into the interior of the pumping station.

➔ Plug the measuring cable in the connection X3 of the DCU.

➔ Settings are possible with the extended parameter set at the DCU.

5.11 Connecting to the mains power supply

WARNING

Danger of unsafe electrical installation

Safe operation after installation is the responsibility of the operator.

➔ Do not independently modify or change the pump and electrical equipment.
➔ Make sure that the system is integrated in an emergency off safety circuit.
➔ Consult Pfeiffer Vacuum for special requirements.

➔ Observe the information on the rating plae.
➔ Plug the mains cable into the the mains connection on the rear side of the pumping station and fix it with the clip.
➔ Connect the mains cable to the mains.

6 Operation

6.1 Commissioning

The following important settings are programmed in the electronic drive unit ex factory.

- Parameter **[P:027]** Gas mode: 0 = heavy gases
- Parameter **[P:700]** Set value max. run-up time monitoring: 8 min
- Parameter **[P:701]** Rotation speed switchpoint: 80% of the nominal roation speed
- Parameter **[P:707]** Set value rotation speed setting mode: 65 % of the nominal rotation speed
- Parameter **[P:708]** Set value power consumption 60 % (may be only reduced)
- Parameter **[P:720]** Venting rotation speed at delayed venting: 50% of the nominal rotation speed
- Parameter **[P:721]** Venting time: 3600 s

➔ Loosen the transportation lock before first-time starting.
➔ When water cooling is used: Open cooling water supply and check the flow.
➔ When sealing gas is used: Open the sealing gas supply and check the flow.

Comply run-up time
Pump throughput can be impaired by condensate or remainig moisture in the backing area. This can lead to exceeding the maximum run-up time.
➔ **Recommendation:** When switching on, open the gas ballast valve for about 5 min. *(see p. 21, chap. 6.5)*.

NOTICE

Danger of the pump being destroyed
Pumping of gases with a higher molecular mass in the wrong gas mode can lead to destruction of the pump.
➔ Ensure the gas mode is correctly set.
➔ Contact Pfeiffer Vacuum before using gases with a greater molecular mass (> 80).

6.2 Operation modes

The following operation modes are available:

- Operation via RS-485 and Pfeiffer Vacuum display and control units or PC

6.3 Function description

WARNING

Danger due to open high vacuum flange
The rotor of the turbopump turns at high speed. If the high vacuum flange is open, there is a danger of cut injuries and that the pump can be destroyed by objects falling into it.
➔ Never operate the pump with an open high vacuum flange.

Operation with DCU

➔ Consider the following manuals for the operation via Pfeiffer Vacuum display and control units:
- Operating instructions "DCU"
- Operating instructions "Electronic drive unit"

➔ Switch on the mains supply via the main switch.
➔ Switch on the pumping station via button "ON/OFF" on the DCU 002.
➔ Settings are possible with the extended parameter set at the DCU.

➔ Settings are possible via the RS-485 by using DCU, HPU or PC.

Use of the DCU as a remote control

The display and control unit can be removed from the pumping station and used as a remote control.

➔ Switch off the pumping station at the master switch.
➔ Disconnect the mains plug.
➔ Unscrew and remove the 4 fastening screws with washers from the front panel of the display and control unit.
➔ Lift out the display and control unit from the casing.
  – Be careful of the casing seal.
➔ Swap the connecting cable between the display and control unit and the electronic drive unit marked "RS 485" for a longer M12 interface cable (accessory).

6.4 Saving energy

Depending on the power consumption of the turbopump the electronic drive unit can control the backing pump operation. Consequently, the supplied fore-vacuum pressure depends on the turbopump power consumption. Standby operation of the backing pump can reduce the overall power consumption of the pumping system and the operating temperature of the backing pump as well.

- Intermittend mode only for diaphragm pumps
- No control for DuoLine

The diaphragm pump is switched on and off in dependence of the turbopump's power consumption. The switching thresholds for the backing pump are adjustable via the DCU. Fluctuations in the power consumption of idling turbopumps and type-dependent varying fore-vacuum pressures of the backing pumps require the switching thresholds to be set separately for the intermittend mode.

➔ Parameter **[P:794]** = 1 (Displaying the extended parameter set at the DCU)
➔ Parameter **[P:025]** = 1 (Intermittend operation).
➔ Configure thresholds **[P:710]** and **[P:711]** according to the operating instructions "Electronic Drive Unit".

6.5 Operation with gas ballast valve

Steam or moisture from pumped media can condense in the vacuum pump and hence impair the suction performance.

Letting in gas ballast improves the discharge of condensate, and the pump achieves the specified final vacuum more quickly. The gas ballast valve can be replaced with a flushing gas connection if necessary.

➔ For operation with gas ballast, please refer to the operating manual for the backing pump.

Elimination of large amounts of condensate

If the open gas ballast valve alone is not sufficient to reduce the condensate load, the pumping system with switched off turbopump can be relieved additionally via the venting connection.

- Prerequisite is an existing display and control unit.
- Admit dry inert gas at the venting connection, if possible.

➔ Switch the backing pump to continous operation by means of the associated parameters (accessories- or digital input).
  – for TC 110: **[P:024]** = 10
  – for TC 400: **[P:035]** = 7
➔ Switch off the pumping station (switch S1).

– Backing pump keeps running.

➔ Open venting screw upon stillstand of the turbopump respectively let the venting process proceed via the connected venting valve.

➔ Relieve pumping system of condensate for about 5 minutes.

➔ Repeat, if necessary.

➔ Restore starting configuration of the backing pump.

– for TC 110: **[P:024]** = 13

– for TC 400: **[P:035]** = 3

➔ Reset turbo pumping station.

6.6 Operation with fore-vacuum valve

The fore-vacuum safety valve (optional accessory) is located in the fore-vacuum line between the turbopump and the backing pump. It protects the process vacuum and the turbopump from inadvertent venting upon stillstand of the pumping station (backing pump) or power failure. The valve is closed currentless.

- Pumping station "On" = Fore-vacuum safety valve open
- Pumping station "Off" = Fore-vacuum safety valve closed

6.7 Switching off and venting

Switching off

After the turbopump is switched off, it must be vented to avoid contamination due to particles streaming back from the fore-vacuum area.

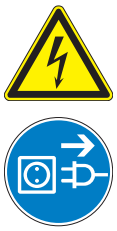

WARNING

Danger of electric shock

The pumping station is only free of voltages when the mains plug has been disconnected.

➔ Switch off the master switch and disconnect the mains plug before all work.

➔ Secure against unintentional restarting.

➔ Switch off the pumping station via the "ON/OFF" button on the DCU.

➔ Venting (possibilities, see below)

➔ Switch off the pumping station at the master switch.

➔ For water cooling: Shut off the water supply.

Venting

Venting with Pfeiffer Vacuum Venting Valve

➔ Enable venting via the functions of the electronic drive unit.

➔ Settings are possible via the RS-485 by using DCU, HPU or PC.

Venting rotation speed	Switch off the pumping station	Mains power failure[1)]
50% of the nominal rotation speed	Venting valve opens for 3600 s (1 h, works setting)	Venting valve opens for 3600 s (1 h, works setting)

[1)]When mains power is restored the venting procedure is aborted.

Basic information for the rapid venting

Venting of the vacuum chamber in two steps. Ask for details on individual solutions from Pfeiffer Vacuum.

➔ Vent for 20 seconds at a rate of pressure rise of max. 15 hPa/s.

– The valve cross section for the venting rate of 15 hPa/s must be adapted to the size of the vacuum chamber.

– For small vacuum chambers, use the Pfeiffer Vacuum venting valve.

➔ Then vent with an additional venting valve of any desired size.

7 Maintenance / replacement

WARNING

Contamination of parts and operating fluid by pumped media is possible.

Poisoning hazard through contact with materials that damage health.

➔ In the case of contamination, carry out appropriate safety precautions in order to prevent danger to health through dangerous substances.

➔ Decontaminate affected parts before carrying out maintenance work.

NOTICE

Disclaimer of liability

Pfeiffer Vacuum accepts no liability for personal injury or material damage, losses or operating malfunctions due to improperly performed maintenance. The liability and warranty entitlement expires.

WARNING

Danger of electric shock

The pumping station is only free of voltages when the mains plug has been disconnected.

➔ Switch off the master switch and disconnect the mains plug before all work.

➔ Secure against unintentional restarting.

7.1 Maintenance intervals and responsibilities

- Clean the pumping station externally with a lint-free cloth and little industrial alcohol.
- Carry out the required maintenance on the components of the pumping station in accordance with the instructions in the individual operating manuals.
- Clarify shorter maintenance intervals for extreme loads or impure processes with Pfeiffer Vacuum Service.
- For all other cleaning, maintenance or repair work, please contact your Pfeiffer Vacuum service location.

7.2 Removal of components for their maintenance

In some cases, components may need to be dismantled from the pumping station so that customers can carry out necessary maintenance work on them (they should then be reassembled in reverse order).

Dismantling connections

➔ Switch off the pumping station at the master switch.

➔ Disconnect the mains plug.

➔ Remove the connector plug from the electronic drive unit.

NOTICE

Note the factory settings.

The accessory connections on the turbopump have been preconfigured at the factory. Interchanging the control leads on the connector causes the pumping station to malfunction or fail.

➔ Do not interchange the control leads.

➔ Accessory connections can be configured for operation with the DCU.

– For more information refer to the operating instructions for the electronic drive unit of the turbopump.

Dismantling the casing panels

The casing panels are fixed with quick release screws.

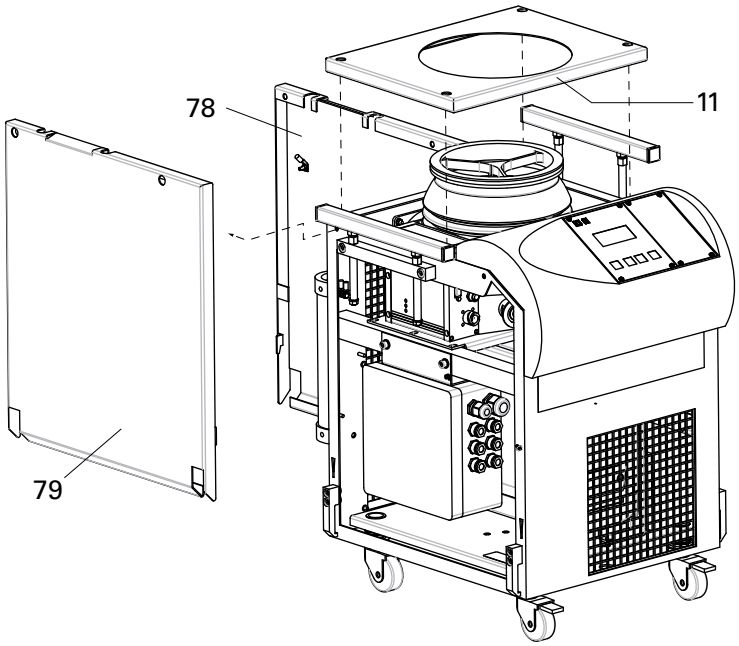

Fig. 9: HiCube Classic, dismantling the casing panels

11	Casing cover	78	Side panel 1	79	Side panel 2

➔ Loosen four quick release screws from the casing cover.

➔ Remove the casing cover.

– Disconnect the earthing cable from the terminal socket of the casing cover.

➔ Lift the carrying handle.

➔ Loosen two retaining screws each from a side panel.

➔ Remove the side panel:

– Lift the side panel approx. 2-3 cm from its adjustment and tilt it outwards.
– Disconnect the earthing cable from the terminal socket of the side panel.
– Remove the side panel from the pumping station.

Dismantling of the turbopump

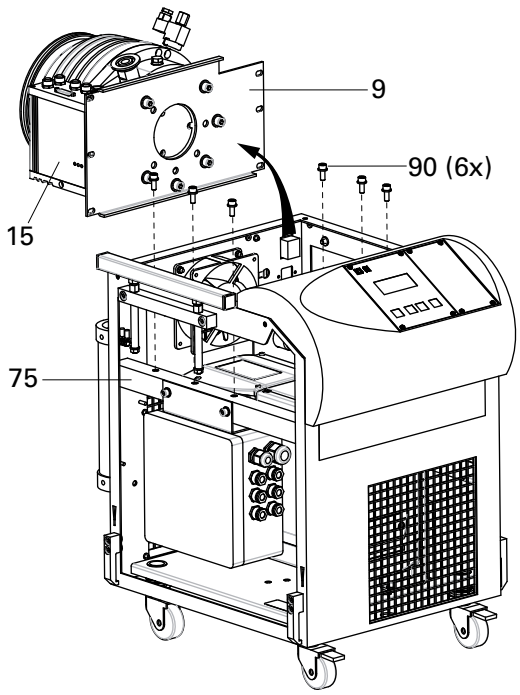

9 Mounting plate
15 Turbopump
75 Casing
90 Allen head screw

Fig. 10: Dismantling of the turbopump

➔ Detach the fore-vacuum line from the turbopump and take it off.
  – Do not kink or damage the fore-vacuum hose.

➔ Unscrew and remove all Allen head screws 90 (6x) from the mounting plate.
  – Tightening torque for the fixing screws when mounted: 33 Nm

➔ Take off the turbopump with the mounting plate from the casing.

The opening in the mounting plate makes it easy for customers to perform maintenance work on the turbopump (e.g. change the lubricant reservoir).

7.3 Changing the operating fluid

Only applies to HiCube with rotary vane pump as backing pump!

WARNING

Operating fluid may contain toxic substances from the pumped media!
Danger of poisoning from the emission of harmful substances from the operating fluid.
➔ Wear suitable protective clothing and respirators.
➔ Dispose of operating fluid according to the local regulations

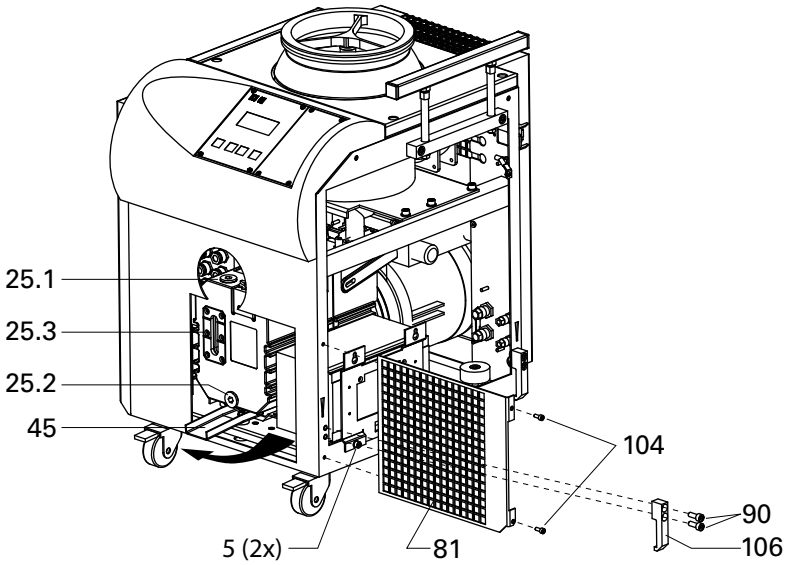

Fig. 11: Changing the operating fluid for HiCube Classic with rotary vane pump

5	Allen head screw	25.3	Sight glass	90	Allen head screw
25.1	Filling screw	45	Operating fluid duct	104	Lens head screw
25.2	Drain screw	81	Perforated plate	106	Securing hook

➔ Release the lashing strap at the front right fastening hook.
➔ Uscrew the securing hooks from the frame (2x Allen head screws 90).
➔ Loosen the power supply support fastening screws (2x Allen head screws 5).
➔ Lift the power supply and shift it aside.
– Do **not** loosen electrical connections!

➔ Unscrew two screws 104 from the frame.
➔ Remove the perforated plate sidewise out of the frame.

➔ Swivel out the operating fluid duct from the pumping station frame.
➔ Put a suitable container under the operating fluid duct.
➔ Change the operating fluid according to the operating instructions of the rotay vane pump.

➔ Assembly of the pumping station in reverse order.
➔ Re-fasten the pumping station with all the lashing straps.

8 Decommissioning

8.1 Shutting down for longer periods

WARNING

Contamination of parts and operating fluid by pumped media is possible.

Poisoning hazard through contact with materials that damage health.

➔ In the case of contamination, carry out appropriate safety precautions in order to prevent danger to health through dangerous substances.

➔ Decontaminate affected parts before carrying out maintenance work.

If the pumping station should be shut down for longer than a year:

➔ Remove the pumping station from the system, if necessary.

➔ Change the operating fluid reservoir of the turbopump.

➔ Only store the pumping station indoors at an ambient temperature between -10 °C and +40 °C.

➔ In rooms with moist or aggressive atmospheres, the pumping station must be airproof shrink-wrapped in a plastic bag together with a bag of dessicant.

8.2 Re-starting

NOTICE

Restarting

The serviceability of the operating fluid of the turbopump without operation is a maximum of 4 years. Before restarting after a shut-down of **4 years or longer**, carry out the following work:

➔ Replace the operating fluid reservoir

➔ Replace bearings

➔ Follow the maintenance instructions and inform Pfeiffer Vacuum

➔ Check pumping station for contamination and moisture.

➔ Clean the pumping station externally with a lint-free cloth and little industrial alcohol.

➔ If necessary, have Pfeiffer Vacuum Service clean the pumping station completely.

➔ Installation and commissioning in accordance with the operating instructions.

8.3 Disposal

Products or parts thereof (mechanical and electrical components, operating fluids, etc.) may cause environmental burden.

➔ Safely dispose of the materials according to the locally applicable regulations.

9 Malfunctions

Malfunctions on the pumping station are usually caused by faults on individual components. Faults are indicated by the LEDs at the electronic drive unit of the turbopump. Alternatively, a fault code can also be output at the display and control unit DCU.

9.1 Rectifying malfunctions

Problem	Possible causes	Remedy
Pumping station will not start; none of the integrated LEDs on the electronic drive unit of the turbopump light up	• Electrical supply interrupted	⇨ Check the plug contacts at the relay box and the power supply unit. ⇨ Check the supply lines of the pumping station. ⇨ Check the output voltage (24 V DC) at the "DC out" terminal of the power supply unit ⇨ Check the plug contacts on the power supply unit
	• Incorrect operating voltage	⇨ Apply correct operating voltage ⇨ Observe the ratings on the type plate.
	• No operating voltage applied	⇨ Apply the correct operating voltage.
	• Electronic drive unit defective	⇨ Replace the electronic drive unit. ⇨ Contact Pfeiffer Vacuum Service.
Pump not achieving the required ultimate pressure	• Condensate in the backing pump	⇨ Open the gas ballast valve at the backing pump.
	• Gas ballast valve open	⇨ Close the gas ballast valve at the backing pump.

- Please refer to the relevant operating manual for troubleshooting at pumping station components.
- For additional queries, contact Pfeiffer Vacuum Service.

10 Service

Pfeiffer Vacuum offers first-class service!

- Operating fluid and bearing change on the spot by Pfeiffer Vacuum FieldService
- Maintenance / repair in the nearby ServiceCenter or ServicePoint
- Fast replacement with exchange products in mint condition
- Advice on the most cost-efficient and quickest solution

Detailed information, addresses and forms at: **www.pfeiffer-vacuum.com (Service**).

Maintenance and repair in the Pfeiffer Vacuum ServiceCenter

The following steps are necessary to ensure a fast, smooth servicing process:

➔ Download the forms "Service Request" and "Declaration on Contamination".[1)]
➔ Fill out the "Service Request" form and send it by fax or e-mail to your Pfeiffer Vacuum service address.
➔ Include the confirmation on the service request from Pfeiffer Vacuum with your shipment.
➔ Fill out the declaration on contamination and include it in the shipment (required!).
➔ Dismantle all accessories.
➔ Drain the operating fluid (applies for turbopumps with pumping speed > 700 l/s).
➔ Leave electronic drive on the pump.
➔ Close the flange openings by using the original protective covers.
➔ If possible, send pump or unit in the original packaging.

Sending of contaminated pumps or devices

No units will be accepted if they are contaminated with micro-biological, explosive or radioactive substances. “Hazardous substances” are substances and compounds in accordance with the hazardous goods directive (current version). If pumps are contaminated or the declaration on contamination is missing, Pfeiffer Vacuum performs decontamination at the shipper's expense.

➔ Neutralise the pump by flushing it with nitrogen or dry air.
➔ Close all openings airtight.
➔ Seal the pump or unit in suitable protective film.
➔ Return the pump/unit only in a suitable and sturdy transport container and send it in while following applicable transport conditions.

Exchange unit

The factory operating parameters are always preset with exchange units. If you use changed parameters for your application, you have to set these again.

Service orders

All service orders are carried out exclusively according to our repair conditions for vacuum units and components.

[1)] Forms under www.pfeiffer-vacuum.com

11 Spare parts

Please also specify model number of the the rating plate when ordering accessories or spare parts.

Refer to the operating manuals for the individual components.

12 Accessories

Please also specify model number of the the rating plate when ordering accessories or spare parts.

Refer to the operating manuals for the individual components.

13 Technical data

13.1 General

Conversion table: pressure units

	mbar	bar	Pa	hPa	kPa	Torr mm Hg
mbar	1	$1 \cdot 10^{-3}$	100	1	0.1	0.75
bar	1000	1	$1 \cdot 10^{5}$	1000	100	750
Pa	0.01	$1 \cdot 10^{-5}$	1	0.01	$1 \cdot 10^{-3}$	$7.5 \cdot 10^{-3}$
hPa	1	$1 \cdot 10^{-3}$	100	1	0.1	0.75
kPa	10	0.01	1000	10	1	7.5
Torr mm Hg	1.33	$1.33 \cdot 10^{-3}$	133.32	1.33	0.133	1
1 Pa = 1 N/m^2						

Conversion table: gas throughput units

	mbar·l/s	Pa·m^3/s	sccm	Torr·l/s	atm·cm^3/s
mbar·l/s	1	0.1	59.2	0.75	0.987
Pa·m^3/s	10	1	592	7.5	9.87
sccm	$1.69 \cdot 10^{-2}$	$1.69 \cdot 10^{-3}$	1	$1.27 \cdot 10^{-2}$	$1.67 \cdot 10^{-2}$
Torr·l/s	1.33	0.133	78.9	1	1.32
atm·cm^3/s	1.01	0.101	59.8	0.76	1

13.2 HiCube 80 Classic

Parameter	HiCube 80 Classic	HiCube 80 Classic	HiCube 80 Classic	HiCube 80 Classic
Flange (in)	DN 40 ISO-KF	DN 40 ISO-KF	DN 40 ISO-KF	DN 40 ISO-KF
Flange (out)	G 1/2" ; G 1/4"	G 1/2" ; G 1/4"	G 1/2"	G 1/2"
Backing pump	MVP 040	MVP 070	DUO 3	DUO 5 M
Pumping speed turbopump	35 l/s	35 l/s	35 l/s	35 l/s
Pumping speed backing pump at 50 Hz	2.3 m^3/h	3.8 m^3/h	2.5 m^3/h	5 m^3/h
Ultimate pressure	$< 1 \cdot 10^{-7}$ hPa	$< 1 \cdot 10^{-7}$ hPa	$< 1 \cdot 10^{-7}$ hPa	$< 1 \cdot 10^{-7}$ hPa
Relative humidity of air	5-85, non-condensing %	5-85, non-condensing %	5-85, non-condensing %	5-85, non-condensing %
Cooling method, standard	Air	Air	Air	Air
Power consumption max.	290 W	360 W	270 W	360 W
Weight	36.4 kg	41.4 kg	35.5 kg	44 kg

Parameter	HiCube 80 Classic	HiCube 80 Classic	HiCube 80 Classic	HiCube 80 Classic
Flange (in)	DN 63 ISO-K	DN 63 ISO-K	DN 63 ISO-K	DN 63 ISO-K
Flange (out)	G 1/2" ; G 1/4"	G 1/2" ; G 1/4"	G 1/2"	G 1/2"
Backing pump	MVP 040	MVP 070	DUO 3	DUO 5 M
Pumping speed turbopump	67 l/s	67 l/s	67 l/s	67 l/s
Pumping speed backing pump at 50 Hz	2.3 m^3/h	3.8 m^3/h	2.5 m^3/h	5 m^3/h
Ultimate pressure	$< 1 \cdot 10^{-7}$ hPa	$< 1 \cdot 10^{-7}$ hPa	$< 1 \cdot 10^{-7}$ hPa	$< 1 \cdot 10^{-7}$ hPa
Relative humidity of air	5-85, non-condensing %	5-85, non-condensing %	5-85, non-condensing %	5-85, non-condensing %
Cooling method, standard	Air	Air	Air	Air
Power consumption max.	290 W	360 W	270 W	360 W
Weight	36.4 kg	41.4 kg	35.5 kg	44 kg

Parameter	HiCube 80 Classic	HiCube 80 Classic	HiCube 80 Classic	HiCube 80 Classic
Flange (in)	DN 63 CF-F	DN 63 CF-F	DN 63 CF-F	DN 63 CF-F
Flange (out)	G 1/2" ; G 1/4"	G 1/2" ; G 1/4"	G 1/2"	G 1/2"
Backing pump	MVP 040	MVP 070	DUO 3	DUO 5 M
Pumping speed turbopump	67 l/s	67 l/s	67 l/s	67 l/s

Parameter	HiCube 80 Classic	HiCube 80 Classic	HiCube 80 Classic	HiCube 80 Classic
Pumping speed backing pump at 50 Hz	2.3 m^3/h	3.8 m^3/h	2.5 m^3/h	5 m^3/h
Ultimate pressure	< 1 · 10^{-8} hPa	< 1 · 10^{-8} hPa	< 5 · 10^{-10} hPa	< 5 · 10^{-10} hPa
Relative humidity of air	5-85, non-condensing %	5-85, non-condensing %	5-85, non-condensing %	5-85, non-condensing %
Cooling method, standard	Air	Air	Air	Air
Power consumption max.	290 W	360 W	270 W	360 W
Weight	37.8 kg	42.8 kg	36.9 kg	45.4 kg

13.3 HiCube 300 Classic

Parameter	HiCube 300 Classic	HiCube 300 Classic	HiCube 300 Classic	HiCube 300 Classic
Flange (in)	DN 100 ISO-K	DN 100 ISO-K	DN 100 ISO-K	DN 100 ISO-K
Flange (out)	G 1/2" ; G 1/4"	G 1/2" ; G 1/4"	G 1/2"	G 1/2"
Backing pump	MVP 040	MVP 070	DUO 3	DUO 5 M
Pumping speed turbopump	260 l/s	260 l/s	260 l/s	260 l/s
Pumping speed backing pump at 50 Hz	2.3 m^3/h	3.8 m^3/h	2.5 m^3/h	5 m^3/h
Ultimate pressure	< 1 · 10^{-7} hPa	< 1 · 10^{-7} hPa	< 1 · 10^{-7} hPa	< 1 · 10^{-7} hPa
Relative humidity of air	5-85, non-condensing %	5-85, non-condensing %	5-85, non-condensing %	5-85, non-condensing %
Cooling method, standard	Air	Air	Air	Air
Power consumption max.	480 W	550 W	460 W	550 W
Weight	41.2 kg	46.2 kg	40.3 kg	48.8 kg

Parameter	HiCube 300 Classic	HiCube 300 Classic	HiCube 300 Classic	HiCube 300 Classic
Flange (in)	DN 100 CF-F	DN 100 CF-F	DN 100 CF-F	DN 100 CF-F
Flange (out)	G 1/2" ; G 1/4"	G 1/2" ; G 1/4"	G 1/2"	G 1/2"
Backing pump	MVP 040	MVP 070	DUO 3	DUO 5 M
Pumping speed turbopump	260 l/s	260 l/s	260 l/s	260 l/s
Pumping speed backing pump at 50 Hz	2.3 m^3/h	3.8 m^3/h	5 m^3/h	5 m^3/h
Ultimate pressure	< 1 · 10^{-8} hPa	< 1 · 10^{-8} hPa	< 5 · 10^{-10} hPa	< 5 · 10^{-10} hPa
Relative humidity of air	5-85, non-condensing %	5-85, non-condensing %	5-85, non-condensing %	5-85, non-condensing %
Cooling method, standard	Air	Air	Air	Air
Power consumption max.	480 W	550 W	460 W	550 W
Weight	43.2 kg	48.2 kg	40.3 kg	48.8 kg

13.4 HiCube 400 Classic

Parameter	HiCube 400 Classic	HiCube 400 Classic	HiCube 400 Classic
Flange (in)	DN 100 ISO-K	DN 100 ISO-K	DN 100 ISO-K
Flange (out)	G 1/2" ; G 1/4"	G 1/2"	G 1/2"
Backing pump	MVP 070	DUO 3	DUO 5 M
Pumping speed turbopump	355 l/s	355 l/s	355 l/s
Pumping speed backing pump at 50 Hz	3.8 m^3/h	2.5 m^3/h	5 m^3/h
Ultimate pressure	< 1 · 10^{-7} hPa	< 1 · 10^{-7} hPa	< 1 · 10^{-7} hPa
Relative humidity of air	5-85, non-condensing %	5-85, non-condensing %	5-85, non-condensing %
Cooling method, standard	Air	Air	Air
Power consumption max.	670 W	580 W	670 W
Weight	51.6 kg	45.7 kg	54.2 kg

Parameter	HiCube 400 Classic	HiCube 400 Classic	HiCube 400 Classic
Flange (in)	DN 100 CF-F	DN 100 CF-F	DN 100 CF-F
Flange (out)	G 1/2" ; G 1/4"	G 1/2"	G 1/2"
Backing pump	MVP 070	DUO 3	DUO 5 M
Pumping speed turbopump	355 l/s	355 l/s	355 l/s

Parameter	HiCube 400 Classic	HiCube 400 Classic	HiCube 400 Classic
Pumping speed backing pump at 50 Hz	3.8 m^3/h	2.5 m^3/h	5 m^3/h
Ultimate pressure	$< 1 \cdot 10^{-8}$ hPa	$< 5 \cdot 10^{-10}$ hPa	$< 5 \cdot 10^{-10}$ hPa
Relative humidity of air	5-85, non-condensing %	5-85, non-condensing %	5-85, non-condensing %
Cooling method, standard	Air	Air	Air
Power consumption max.	670 W	580 W	670 W
Weight	57.5 kg	45.7 kg	54.2 kg

13.5 HiCube 700 Classic

Parameter	HiCube 700 Classic	HiCube 700 Classic	HiCube 700 Classic
Flange (in)	DN 160 ISO-K	DN 160 ISO-K	DN 160 ISO-K
Flange (out)	G 1/2" ; G 1/4"	G 1/2"	G 1/2"
Backing pump	MVP 070	DUO 3	DUO 5 M
Pumping speed turbopump	685 l/s	685 l/s	685 l/s
Pumping speed backing pump at 50 Hz	3.8 m^3/h	2.5 m^3/h	5 m^3/h
Ultimate pressure	$< 1 \cdot 10^{-7}$ hPa	$< 1 \cdot 10^{-7}$ hPa	$< 1 \cdot 10^{-7}$ hPa
Relative humidity of air	5-85, non-condensing %	5-85, non-condensing %	5-85, non-condensing %
Cooling method, standard	Air	Air	Air
Power consumption max.	670 W	580 W	670 W
Weight	52 kg	46.2 kg	54.7 kg

Parameter	HiCube 700 Classic	HiCube 700 Classic	HiCube 700 Classic
Flange (in)	DN 160 CF-F	DN 160 CF-F	DN 160 CF-F
Flange (out)	G 1/2" ; G 1/4"	G 1/2"	G 1/2"
Backing pump	MVP 070	DUO 3	DUO 5 M
Pumping speed turbopump	685 l/s	685 l/s	685 l/s
Pumping speed backing pump at 50 Hz	3.8 m^3/h	2.5 m^3/h	5 m^3/h
Ultimate pressure	$< 1 \cdot 10^{-8}$ hPa	$< 5 \cdot 10^{-10}$ hPa	$< 5 \cdot 10^{-10}$ hPa
Relative humidity of air	5-85, non condensing %	5-85, non-condensing %	5-85, non-condensing %
Cooling method, standard	Air	Air	Air
Power consumption max.	670 W	580 W	670 W
Weight	57.9 kg	46.2 kg	54.7 kg

14 Dimensions

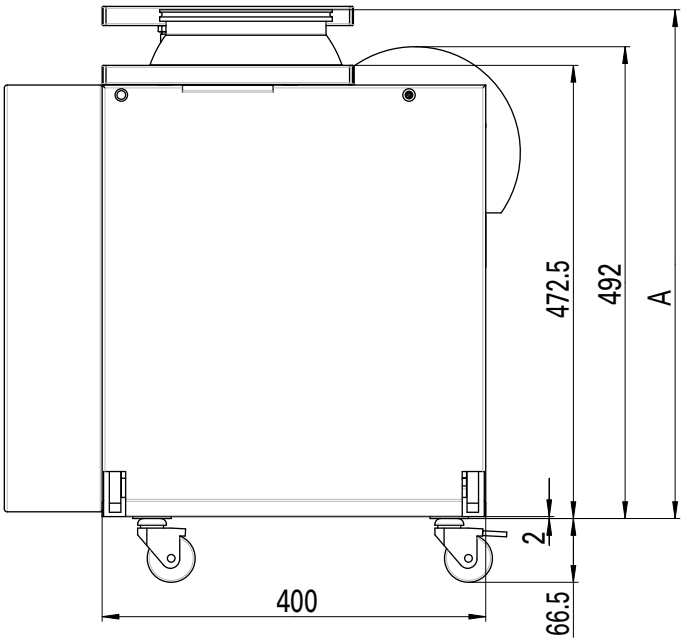

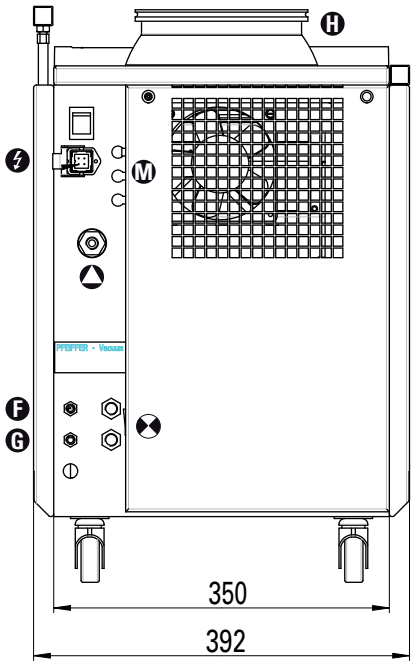

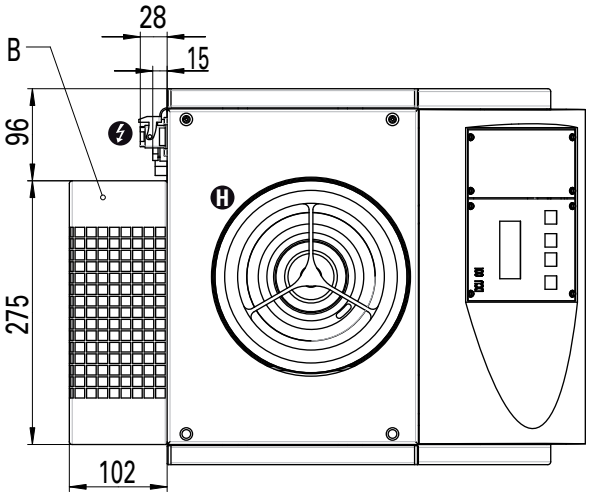

Dimensions	HiCube 80 Classic	HiCube 80 Classic	HiCube 80 Classic
Flange (in)	DN 40 ISO-KF	DN 63 ISO-K	DN 63 CF-F
A	590 mm	581 mm	587 mm
B	102 mm only with DUO 5		

Dimensions	HiCube 300 Classic	HiCube 300 Classic
Flange (in)	DN 100 ISO-K	DN 100 CF-F
A	580 mm	592 mm
B	102 mm only with DUO 5	

Dimensions	HiCube 400 Classic	HiCube 400 Classic
Flange (in)	DN 100 ISO-K	DN 100 CF-F
A	624 mm	624 mm
B	102 mm only with DUO 5	

Dimensions	HiCube 700 Classic	HiCube 700 Classic
Flange (in)	DN 160 ISO-K	DN 160 CF-F
A	597 mm	609 mm
B	102 mm only with DUO 5	

Declaration of conformity

We hereby declare that the product cited below satisfies all relevant provisions according to the following **EC directives**:

- **Machinery 2006/42/EC (Annex II, no. 1 A)**
- **Electromagnetic Compatibility 2004/108/EC**

The agent responsible for compiling the technical documentation is Mr. Helmut Bernhardt, Pfeiffer Vacuum GmbH, Berliner Straße 43, 35614 Aßlar.

HiCube
HiCube Classic

Harmonised standards and national standards and specifications which have been applied:

DIN EN ISO 12100 : 2011-03	DIN EN 61326-1 : 2006
DIN EN 1012-2 : 1996	DIN EN 62061 : 2005
DIN EN 61010-1 : 2010	Semi F47-0200
DIN EN 61000-3-2 : 2008	
DIN EN 61000-3-3 : 2006	

Signatures:

Pfeiffer Vacuum GmbH
Berliner Straße 43
35614 Asslar
Germany

(M.Bender) Managing Director	(Dr. M. Wiemer) Managing Director	CE/2013

PFEIFFER VACUUM

PFEIFFER VACUUM

Vacuum solutions from a single source

Pfeiffer Vacuum stands for innovative and custom vacuum solutions worldwide, technological perfection, competent advice and reliable service.

Complete range of products

From a single component to complex systems: We are the only supplier of vacuum technology that provides a complete product portfolio.

Competence in theory and practice

Benefit from our know-how and our portfolio of training opportunities! We can support you with your plant layout and provide first-class on-site-service worldwide.

Are you looking for a perfect vacuum solution? Please contact us

Pfeiffer Vacuum GmbH
Headquarters • Germany
T +49 6441 802-0
info@pfeiffer-vacuum.de