# OPERATING INSTRUCTIONS

EN

Translation of the Original

# HIPACE 80

**Turbopump**

PFEIFFER VACUUM

## Dear Customer,

Thank you for choosing a Pfeiffer Vacuum product. Your new turbopump is designed to support you by its performance, its perfect operation and without interfering your individual application. The name Pfeiffer Vacuum stands for high-quality vacuum technology, a comprehensive and complete range of top-quality products and first-class service. With this expertise, we have acquired a multitude of skills contributing to an efficient and secure implementation of our product.

Knowing that our product must not interfere with your actual work, we are convinced that our product offers you the solution that supports you in the effective and trouble-free execution of your individual application.

Please read these operating instructions before putting your product into operation for the first time. If you have any questions or suggestions, please feel free to contact info@pfeiffer-vacuum.de.

Further operating instructions from Pfeiffer Vacuum can be found in the Download Center on our website.

## Disclaimer of liability

These operating instructions describe all models and variants of your product. Note that your product may not be equipped with all features described in this document. Pfeiffer Vacuum constantly adapts its products to the latest state of the art without prior notice. Please take into account that online operating instructions can deviate from the printed operating instructions supplied with your product.

Furthermore, Pfeiffer Vacuum assumes no responsibility or liability for damage resulting from the use of the product that contradicts its proper use or is explicitly defined as foreseeable misuse.

## Copyright

This document is the intellectual property of Pfeiffer Vacuum and all contents of this document are protected by copyright. They may not be copied, altered, reproduced or published without the prior written permission of Pfeiffer Vacuum.

We reserve the right to make changes to the technical data and information in this document.

# Table of contents


**1 About this manual 7**
1.1 Validity 7
1.1.1 Applicable documents 7
1.1.2 Product variants affected 7
1.2 Target group 7
1.3 Conventions 7
1.3.1 Instructions in the text 7
1.3.2 Pictographs 8
1.3.3 Stickers on the product 8
1.3.4 Abbreviations 9
1.4 Trademark proof 9

**2 Safety 10**
2.1 General safety instructions 10
2.2 Safety instructions 10
2.3 Safety precautions 14
2.4 Limits of use of the product 14
2.5 Proper use 15
2.6 Foreseeable improper use 15
2.7 Personnel qualification 15
2.7.1 Ensuring personnel qualification 16
2.7.2 Personnel qualification for maintenance and repair 16
2.7.3 Advanced training with Pfeiffer Vacuum 16

**3 Product description 17**
3.1 Function 17
3.1.1 Cooling 17
3.1.2 Rotor bearing 17
3.1.3 Drive 17
3.2 Scope of delivery 18
3.3 Identifying the product 18
3.3.1 Product types 18
3.3.2 Product features 18

**4 Transportation and Storage 19**
4.1 Transport 19
4.2 Storage 19

**5 Installation 20**
5.1 Preparatory work 20
5.2 Connecting the high vacuum side 20
5.2.1 Requirements for the dimensioning of a counter flange 20
5.2.2 Considering earthquake protection 21
5.2.3 Using a splinter shield or protective screen 22
5.2.4 Using the vibration compensator 22
5.2.5 Mounting orientations 23
5.2.6 Installation of ISO-KF flange 23
5.2.7 Attaching ISO-K flange onto ISO-K 24
5.2.8 Installation of ISO-K flange onto ISO-F 24
5.2.9 Attaching CF flange to CF-F 25
5.3 Connecting the fore-vacuum side 27
5.4 Connecting accessories 28
5.5 Connecting the electrical supply 29
5.5.1 Earthing the turbopump 29
5.5.2 Establishing the electric connection 29

**6 Operation 31**

6.1 Commissioning 31
6.2 Operating modes 32
6.2.1 Operation without operating unit 32
6.2.2 Operation via multi-function connection "X3" 32
6.2.3 Operation via Pfeiffer Vacuum display and control unit 32
6.2.4 Operation via field bus 32
6.3 Switching on the turbopump 33
6.4 Operation monitoring 33
6.4.1 Operating mode display via LED 33
6.4.2 Temperature monitoring 34
6.5 Switching off and venting 34
6.5.1 Switching off 34
6.5.2 Venting 34

**7 Maintenance 36**
7.1 General maintenance information 36
7.2 Maintenance intervals and responsibilities 36
7.3 Replacing the operating fluid reservoir 37
7.3.1 Removing the operating fluid reservoir 37
7.3.2 Installing the operating fluid reservoir 38
7.4 Replacing the electronic drive unit 39
7.5 Confirming the rotation speed specification 40

**8 Decommissioning 42**
8.1 Shutting down for longer periods 42
8.2 Recommissioning 42
8.3 Disposing of the vacuum pump 43

**9 Malfunctions 44**

**10 Service solutions from Pfeiffer Vacuum 46**

**11 Spare parts HiPace 80 48**

**12 Accessories 49**
12.1 Accessory information 49
12.2 Ordering accessories 49

**13 Technical data and dimensions 51**
13.1 General 51
13.2 Technical data 51
13.3 Dimensions 53

**Declaration of conformity 55**

# List of tables


| | | |
|---|---|---|
| Tbl. 1: | Abbreviations used in this document | 9 |
| Tbl. 2: | Permissible ambient conditions | 15 |
| Tbl. 3: | Product designation of Pfeiffer Vacuum HiPace turbopumps | 18 |
| Tbl. 4: | Turbopump features | 18 |
| Tbl. 5: | Requirements for the dimensioning of customer-specific high vacuum connection | 21 |
| Tbl. 6: | Effect of splinter shield or protective screen on pumping speed | 22 |
| Tbl. 7: | Factory setting of the electronic drive unit for turbopumps when delivered | 31 |
| Tbl. 8: | Behavior and meaning of the LEDs on the electronic drive unit | 34 |
| Tbl. 9: | Factory settings for delayed venting in turbopumps | 35 |
| Tbl. 10: | Characteristic nominal rotation speeds of the turbopumps | 41 |
| Tbl. 11: | Troubleshooting turbopumps | 45 |
| Tbl. 12: | Overview of the spare parts available for the HiPace 80 | 48 |
| Tbl. 13: | Accessories | 50 |
| Tbl. 14: | Conversion table: Pressure units | 51 |
| Tbl. 15: | Conversion table: Units for gas throughput | 51 |
| Tbl. 16: | Technical data for HiPace 80 \| 24 V | 53 |

# List of figures


| | | |
|---|---|---|
| Fig. 2: | Position of the labels on the product | 8 |
| Fig. 3: | HiPace 80 design | 17 |
| Fig. 4: | Example: Safety connections | 22 |
| Fig. 5: | Recommended alignment when using oil-sealed backing pumps | 23 |
| Fig. 6: | Flange connection ISO-KF to ISO-KF | 23 |
| Fig. 7: | Flange connection ISO-K to ISO-F, bracket screws | 24 |
| Fig. 8: | Flange connection CF-F, hexagon head screw and through hole | 26 |
| Fig. 9: | Flange connection CF-F, stud screw and tapped hole | 26 |
| Fig. 10: | Flange connection CF-F, stud screw and through hole | 27 |
| Fig. 11: | Example of fore-vacuum connection on HiPace 80 | 27 |
| Fig. 12: | Example of accessory connection via adapter TCS 12 | 28 |
| Fig. 13: | Example: Connecting the grounding cable | 29 |
| Fig. 14: | Connecting the electronic drive unit to a power supply pack | 30 |
| Fig. 15: | Removing the operating fluid reservoir | 38 |
| Fig. 16: | Installing the operating fluid reservoir | 39 |
| Fig. 17: | Electronic drive unit installation and removal | 40 |
| Fig. 18: | Spare parts HiPace 80 | 48 |
| Fig. 19: | Dimensions HiPace 80 \| DN 63 ISO-K | 53 |
| Fig. 20: | Dimensions HiPace 80 \| DN 63 CF-F | 53 |
| Fig. 21: | Dimensions HiPace 80 \| DN 40 ISO-KF | 54 |

# 1 About this manual

**IMPORTANT**
Read carefully before use.
Keep the manual for future consultation.

## 1.1 Validity

These operating instructions are for customers of Pfeiffer Vacuum. They describe the function of the designated product and provide the most important information for safe usage of the product. The descriptions comply with applicable directives. All information provided in these operating instructions refer to the current development status of the product. The documentation remains valid as long as the customer does not modify the product in any way.

### 1.1.1 Applicable documents

| Document | Number |
|---|---|
| Operating instructions, “electronic drive unit" TC 110 standard | PT 0204 BN |
| Operating instructions for "electronic drive unit" TC 110 PB | PT 0245 BN |
| Operating instructions, electronic drive unit TC 110 E74 | PT 0301 BN |
| Operating instructions for "electronic drive unit" TC 110 RS | PT 0351 BN |
| Declaration of conformity | Part of this document |

You can find these documents in the Pfeiffer Vacuum Download Center.

### 1.1.2 Product variants affected

- HiPace 80, DN 63 ISO-K, TC 110
- HiPace 80, DN 63 CF-F, TC 110
- HiPace 80, DN 40 ISO-KF, TC 110

## 1.2 Target group

These operating instructions are aimed at all persons performing the following activities on the product:

- Transportation
- Setup (Installation)
- Usage and operation
- Decommissioning
- Maintenance and cleaning
- Storage or disposal

The work described in this document is only permitted to be performed by persons with the appropriate technical qualifications (expert personnel) or who have received the relevant training from Pfeiffer Vacuum.

## 1.3 Conventions

### 1.3.1 Instructions in the text

Usage instructions in the document follow a general structure that is complete in itself. The required action is indicated by an individual step or multi-part action steps.

**Individual action step**

A horizontal, solid triangle indicates the only step in an action.

► This is an individual action step.

**Sequence of multi-part action steps**

The numerical list indicates an action with multiple necessary steps.

1. Step 1
2. Step 2
3. ...

## 1.3.2 Pictographs

Pictographs used in the document indicate useful information.

Note

Tip

## 1.3.3 Stickers on the product

This section describes all the stickers on the product along with their meaning.

| | |
|---|---|
| PFEIFFER VACUUM<br>D-35614 Asslar<br>Mod. HiPace 80<br>P/N PM P03 940<br>S/N - - - - - - - -<br>Oil PM 143 740 -T<br>n, f 90000 1/min, 1500 Hz<br>Mass 2.4 kg Made in Germany 2019/04 | **Rating plate**<br>The rating plate of the turbopump is located on the lower part of the vacuum pump.<br>**Rating plate of the electronic drive unit**<br>The electronic drive unit rating plate is located on the top |
| | **Operating instructions note**<br>This sticker indicates that this operating instructions must be read before performing any tasks. |
| | **Protection class**<br>This sticker describes protection class 1 for the product. Its placement indicates the position for the ground connection. |
| warranty seal<br>PFEIFFER VACUUM | **Closure seal**<br>The product is sealed ex-factory. Damaging or removing a closure seal results in loss of the warranty. |

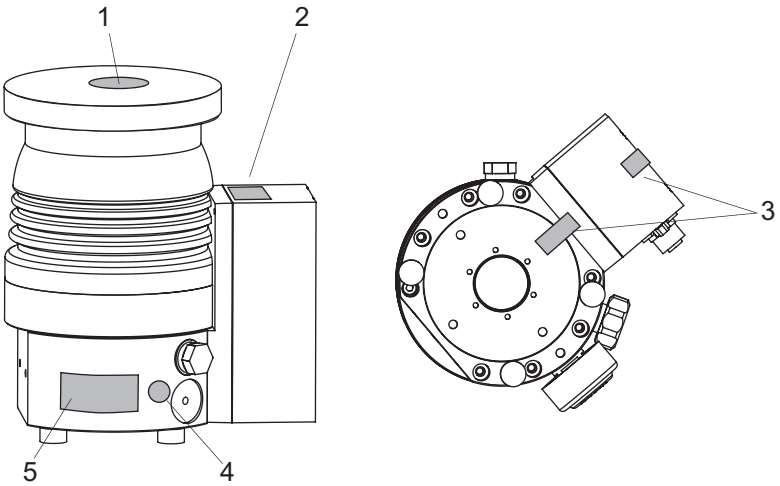


**Fig. 2: Position of the labels on the product**

1 Operating instructions note
2 Rating plate of the electronic drive unit
3 Closure seal
4 Information regarding ground connection
5 Rating plate of the turbopump

### 1.3.4 Abbreviations

| Abbreviation | Meaning in this document |
|---|---|
| **CF** | Flange: Metal-sealed connector in accordance with ISO 3669 |
| **d** | Diameter value (in mm) |
| **DC** | Direct current |
| **DCU** | Display Control Unit. |
| **DN** | Nominal diameter as size description |
| **f** | Rotation speed value of a vacuum pump (frequency, in rpm or Hz) |
| **HPU** | Handheld Programming Unit. |
| **HV** | High vacuum flange, high vacuum side |
| **ISO** | Flange: Connector in accordance with ISO 1609 and ISO 2861 |
| **LED** | Light emitting diode |
| **PE** | Earthed conductor (protective earth) |
| **[P:xxx]** | Electronic drive unit control parameters. Printed in bold as three-digit number in square brackets. Frequently displayed in conjunction with a short description.<br>Example: **[P:312]** software version |
| **S1** | S1 switch on power supply pack |
| **T** | Temperature (in °C) |
| **TC** | Turbopump electronic drive unit (turbo controller) |
| **TPS** | Voltage supply (turbo power supply) |
| **VV** | Fore-vacuum flange, fore-vacuum connection |
| **WAF** | Width across flats |
| **X3** | 15-pole D-Sub connecting socket on the turbopump electronic drive unit |

**Tbl. 1: Abbreviations used in this document**

## 1.4 Trademark proof

- Torx® is a registered trading name of ACUMENT INTELLECTUAL PROPERTIES, LLC.
- Profibus® is a registered trading name of Profibus Nutzerorganisation e.V.

# 2 Safety

## 2.1 General safety instructions

This document includes the following 4 risk levels and 1 information level.

**⚠ DANGER**

**Imminent danger**

Indicates a hazardous situation which, if not avoided, will result in death or serious injury.

- ► Instructions on avoiding the hazardous situation

**⚠ WARNING**

**Possibly imminent danger**

Indicates a hazardous situation which, if not avoided, could result in death or serious injury.

- ► Instructions on avoiding the hazardous situation

**⚠ CAUTION**

**Possibly imminent danger**

Indicates a hazardous situation which, if not avoided, could result in minor or moderate injury.

- ► Instructions on avoiding the hazardous situation

***NOTICE***

**Danger of property damage**

Notice is used to address practices not related to physical injury.

- ► Instructions on avoiding property damage

Notes, tips or examples indicate important information on the product or on this document.

## 2.2 Safety instructions

All safety instructions in this document are based on the results of the risk assessment carried out in accordance with Machinery Directive 2006/42/EC Annex I and EN ISO 12100 Section 5. Where applicable, all life cycle phases of the product were taken into account.

**Risks during transport**

**⚠ WARNING**

**Danger of serious injury due to falling objects**

Due to falling objects there is a risk of injuries to limbs through to broken bones.

- ► Take particular care and pay special attention when transporting products manually.
- ► Do not stack the products.
- ► Wear protective equipment, e.g. safety shoes.

### Risks during installation

**⚠ DANGER**

**Danger to life from electric shock**

Power supply packs that are not specified or are not approved will lead to severe injury to death.

- ► Make sure that the power supply pack meets the requirements for double isolation between mains input voltage and output voltage, in accordance with IEC 61010 and IEC 60950.
- ► Make sure that the power supply pack meets the requirements in accordance with IEC 61010 and IEC 60950.
- ► Where possible, use original power supply packs or only power supply packs that correspond with the applicable safety regulations.

**⚠ WARNING**

**Risk of cuts on moving, sharp-edged parts when reaching into the open high vacuum flange**

With the high vacuum flange open, access to sharp-edged parts is possible. A manual rotation of the rotor increases the danger situation. There is the risk of cuts, up to the separation of body parts (e.g. fingertips). There is a risk of hair and loose clothing being drawn in. Objects falling in destroy the turbopump during subsequent operation.

- ► Only remove the original protective covers immediately prior to connecting the high vacuum flange.
- ► Do not reach into the high vacuum connection.
- ► Wear protective gloves during installation.
- ► Do not start the turbopump with open vacuum connections.
- ► Always carry out the mechanical installation before electrical connection.
- ► Prevent access to the high vacuum connection of the turbopump from the operator side (e.g. open vacuum chamber).

**⚠ WARNING**

**Risk of injury caused by the turbopump breaking away with the vibration compensator in the event of a malfunction**

Sudden jamming of the rotor generates high destructive torques in accordance with ISO 27892. When using a vibration compensator, this will probably lead to the turbopump being sheared off in use. The energy that this would release could throw the entire turbopump or shattered pieces from its interior through the surrounding space. Potentially dangerous gases can escape. There is a risk of very serious injuries, including death, and extensive property damage.

- ► Take suitable safety precautions on-site for the compensation of the occurring torques.
- ► Before installing a vibration compensator, you must first of all contact Pfeiffer Vacuum.

**⚠ WARNING**

**Danger to life from poisoning where toxic process media leak from damaged connections**

Sudden twisting of the turbopump in the event of a fault causes fittings to accelerate. There is the risk of damaging on-site connections (e.g., fore-vacuum line) and resulting leaks. This results in leakage of process media. In processes involving toxic media, there is a risk of injury and danger to life due to poisoning.

- ► Keep masses connected to the turbopump as low as possible.
- ► Use flexible lines to connect to the turbopump where necessary.

**⚠ WARNING**

**Risk of danger to life through missing mains disconnection device**

The vacuum pump and electronic drive unit are **not** equipped with a mains disconnection device (mains switch).

- ► Install a mains disconnection device according to SEMI-S2.
- ► Install a circuit breaker with an interruption rating of at least 10,000 A.

**⚠ WARNING**

**Risk of injury due to incorrect installation**

Dangerous situations may arise from unsafe or incorrect installation.

- ► Do not carry out your own conversions or modifications on the unit.
- ► Ensure the integration into an Emergency Off safety circuit.

**⚠ WARNING**

**Danger of cut injuries from unexpected start up.**

The use of mating plugs of the electronic drive unit (accessories) enables the automatic run-up of the vacuum pump as soon the power is turned on. Attaching mating plugs before or during the installation leads to the movement of parts hence the risk of cut injuries by sharp-edged in the exposed high vacuum flange.

- ► Only connect mating plugs after the mechanical installation.
- ► Only switch on the vacuum pump immediately prior to operation.

### Risks during operation

**⚠ WARNING**

**Risk of burns on hot surfaces when using additional equipment for heating during operation**

The use of additional equipment for heating the vacuum pump or for optimizing the process generates very high temperatures on surfaces that can be touched. There is a risk of burning.

- ► If necessary, set up a contact guard.
- ► If necessary, apply the warning stickers provided for this at the danger points.
- ► Ensure adequate cooling down before working on the vacuum pump or in its vicinity.
- ► Wear protective equipment, e.g., gloves.

**⚠ WARNING**

**Risk of serious injury in the event of vacuum pump destruction due to over pressure**

Gas entry with very high over pressure results in destruction of the vacuum pump. There is a risk of serious injury due to ejected objects.

- ► Never exceed the permissible 1500 hPa (absolute) inlet pressure on the suction side or the venting and sealing gas connection.
- ► Make sure that high, process-related over pressures cannot directly enter the vacuum pump.

**⚠ CAUTION**

**Risk of injuries due to contact with vacuum when venting**

While venting the vacuum pump there is a risk of minor injuries due to the direct contact of body parts with the vacuum, e.g. hematomas.

- ► Do not fully unscrew the venting screw out of the housing during venting.
- ► Keep a distance from automatic venting device, such as venting valves.

### Risks during maintenance and decommissioning

**⚠ WARNING**

**Danger to life from electric shock during maintenance and service work**

The device is only completely de-energized when the mains plug has been disconnected and the turbopump is at a standstill. There is a danger to life from electric shock when making contact with live components.

- ► Before performing all work, switch off the main switch.
- ► Wait until the turbopump comes to a standstill (rotation speed =0).
- ► Remove the mains plug from the device.
- ► Secure the device against unintentional restarting.

**⚠ WARNING**

**Risk of cuts on moving, sharp-edged parts when reaching into the open high vacuum connection**

Incorrect handling of the turbopump before maintenance work results in hazardous situations with risk of injury. There is a risk of cuts from accessing sharp-edged, rotating parts when removing the turbopump.

- ► Wait until the turbopump comes to a standstill (rotation speed f=0).
- ► Switch the turbopump off properly.
- ► Secure the turbopump against re-start.
- ► Seal open connections immediately following removal, using the original protective cover.

**⚠ WARNING**

**Health hazard through poisoning from toxic contaminated components or devices**

Toxic process media result in contamination of devices or parts of them. During maintenance work, there is a risk to health from contact with these poisonous substances. Illegal disposal of toxic substances causes environmental damage.

- ► Take suitable safety precautions and prevent health hazards or environmental pollution by toxic process media.
- ► Decontaminate affected parts before carrying out maintenance work.
- ► Wear protective equipment.

**⚠ WARNING**

**Risk of poisoning from contact with harmful substances**

The operating fluid reservoir and parts of the turbopump may contain toxic substances from pumped media.

- ► Decontaminate affected parts before carrying out maintenance work.
- ► Prevent health hazards or environmental impacts with adequate safety precautions.
- ► Observe the operating fluid safety data sheet.
- ► Dispose of the operating fluid reservoir according to applicable regulations.

**Risks in the event of malfunctions**

**⚠ WARNING**

**Danger to life from the turbopump breaking away in the event of a fault**

Sudden jamming of the rotor generates high destructive torques in accordance with ISO 27892. If the turbopump is **not** properly secured, it can shear off. The energy that this would release could throw the entire turbopump or shattered pieces from its interior through the surrounding space. Potentially dangerous gases can escape. There is a risk of very serious injuries, including death, and extensive property damage.

- ► Follow the installation instructions for this turbopump.
- ► Observe the requirements regarding stability and design of the counter flange.
- ► Use only original accessories or fixing material approved by Pfeiffer Vacuum for the installation.

**⚠ WARNING**

**Risk of injury caused by the turbopump breaking away with the vibration compensator in the event of a malfunction**

Sudden jamming of the rotor generates high destructive torques in accordance with ISO 27892. When using a vibration compensator, this will probably lead to the turbopump being sheared off in use. The energy that this would release could throw the entire turbopump or shattered pieces from its interior through the surrounding space. Potentially dangerous gases can escape. There is a risk of very serious injuries, including death, and extensive property damage.

- ► Take suitable safety precautions on-site for the compensation of the occurring torques.
- ► Before installing a vibration compensator, you must first of all contact Pfeiffer Vacuum.

**⚠ WARNING**

**Danger to life from poisoning where toxic process media leak from damaged connections**

Sudden twisting of the turbopump in the event of a fault causes fittings to accelerate. There is the risk of damaging on-site connections (e.g., fore-vacuum line) and resulting leaks. This results in leakage of process media. In processes involving toxic media, there is a risk of injury and danger to life due to poisoning.

- ► Keep masses connected to the turbopump as low as possible.
- ► Use flexible lines to connect to the turbopump where necessary.

## 2.3 Safety precautions

**Duty to provide information on potential dangers**

The product holder or user is obliged to make all operating personnel aware of dangers posed by this product.

Every person who is involved in the installation, operation or maintenance of the product must read, understand and adhere to the safety-related parts of this document.

**Infringement of conformity due to modifications to the product**

The Declaration of Conformity from the manufacturer is no longer valid if the operator changes the original product or installs additional equipment.

- Following the installation into a system, the operator is required to check and re-evaluate the conformity of the overall system in the context of the relevant European Directives, before commissioning that system.

**General safety precautions when handling the product**

- ► Observe all applicable safety and accident prevention regulations.
- ► Check that all safety measures are observed at regular intervals.
- ► Do not expose body parts to the vacuum.
- ► Always ensure a secure connection to the earthed conductor (PE).
- ► Never disconnect plug connections during operation.
- ► Observe the above shutdown procedures.
- ► Before working on the high vacuum connection, wait until the rotor has stopped completely (rotation speed f = 0).
- ► Never put the device into operation with the high vacuum connection open.
- ► Keep lines and cables away from hot surfaces (> 70°C).
- ► Never fill or operate the unit with cleaning agents or cleaning agent residues.
- ► Do not carry out your own conversions or modifications on the unit.
- ► Observe the unit protection class prior to installation or operation in other environments.

## 2.4 Limits of use of the product

| | |
|---|---|
| Installation location | weatherproof (internal space) |
| Air pressure | 750 hPa to 1060 hPa |
| Installation altitude | max. 5000 m |
| Rel. air humidity | max. 80%, at T <31°C,<br>up to max. 50% at T <40°C |
| Protection class | III |
| Excess voltage category | II |
| Permissible protection degree | IP54 |
| Degree of contamination | 2 |
| Ambient temperature | 5 °C to 30 °C with convection cooling without gas throughput<br>5°C to 35°C with air cooling<br>5°C to 40°C with water cooling |

| | |
|---|---|
| Permissible surrounding magnetic field for air cooling | 3.3 mT |
| Permissible surrounding magnetic field for water cooling | 3.8 mT |
| Maximum irradiated thermal output for air cooling | 0.9 W |
| Maximum irradiated thermal output for water cooling | 1.2 W |
| Maximum permissible rotor temperature of the turbopump | 90 °C |

**Tbl. 2: Permissible ambient conditions**

**Notes on ambient conditions**

The specified permissible ambient temperatures apply to operation of the turbopump at maximum permissible backing pressure or at maximum gas throughput, depending on the cooling type. The turbopump is intrinsically safe thanks to redundant temperature monitoring.

- The reduction in backing pressure or gas throughput permits operation of the turbopump at higher ambient temperatures.
- If the maximum permissible operating temperature of the turbopump is exceeded, the electronic drive unit first reduces the drive output and then switches it off where necessary.

## 2.5 Proper use

- ► Use the turbopump only for generating vacuum.
- ► Use the turbopump only in combination with a suitable backing pump that can deliver up to the required maximum fore-vacuum pressure.
- ► Use the turbopump only in closed indoor areas.
- ► Use the turbopump only for the evacuation of dry and inert gases.

## 2.6 Foreseeable improper use

Improper use of the product invalidates all warranty and liability claims. Any use that is counter to the purpose of the product, whether intentional or unintentional, is regarded as misuse, in particular:

- Establishing the voltage supply without correct installation
- Installation with non-specified fastening material
- Pumping explosive media
- Pumping of corrosive media
- Pumping of condensing vapors
- Pumping of fluids
- Pumping of dust
- Operation with impermissible high gas throughput
- Operation with impermissible high fore-vacuum pressure
- Operation with excessively high irradiated heat output
- Operation in impermissible high magnetic fields
- Operation in an incorrect gas mode
- Venting with impermissible high venting rates
- Use for pressure generation
- Use in areas with ionizing radiation
- Operation in explosion-hazard areas
- Use in systems in which sporadic loads and vibrations or periodic forces act on the device
- The causing of hazardous operating conditions by a presetting on the electronic drive unit that is contrary to the process
- Use of accessories or spare parts that are not listed in these instructions

## 2.7 Personnel qualification

The work described in this document may only be carried out by persons who have appropriate professional qualifications and the necessary experience or who have completed the necessary training as provided by Pfeiffer Vacuum.

**Training people**

1. Train the technical personnel on the product.
2. Only let personnel to be trained work with and on the product when under the supervision of trained personnel.
3. Only allow trained technical personnel to work with the product.
4. Before starting work, make sure that the commissioned personnel have read and understood these operating instructions and all applicable documents, in particular the safety, maintenance and repair information.

## 2.7.1 Ensuring personnel qualification

**Specialist for mechanical work**
Only a trained specialist may carry out mechanical work. Within the meaning of this document, specialists are people responsible for construction, mechanical installation, troubleshooting and maintenance of the product, and who have the following qualifications:

- Qualification in the mechanical field in accordance with nationally applicable regulations
- Knowledge of this documentation

**Specialist for electrotechnical work**
Only a trained electrician may carry out electrical engineering work. Within the meaning of this document, electricians are people responsible for electrical installation, commissioning, troubleshooting, and maintenance of the product, and who have the following qualifications:

- Qualification in the electrical engineering field in accordance with nationally applicable regulations
- Knowledge of this documentation

In addition, these individuals must be familiar with applicable safety regulations and laws, as well as the other standards, guidelines, and laws referred to in this documentation. The above individuals must have an explicitly granted operational authorization to commission, program, configure, mark, and earth devices, systems, and circuits in accordance with safety technology standards.

**Trained individuals**
Only adequately trained individuals may carry out all works in other transport, storage, operation and disposal fields. Such training must ensure that individuals are capable of carrying out the required activities and work steps safely and properly.

## 2.7.2 Personnel qualification for maintenance and repair

**Advanced training courses**
Pfeiffer Vacuum offers advanced training courses to maintenance levels 2 and 3.

Adequately trained individuals are:

- **Maintenance level 1**
  - Customer (trained specialist)
- **Maintenance level 2**
  - Customer with technical education
  - Pfeiffer Vacuum service technician
- **Maintenance level 3**
  - Customer with Pfeiffer Vacuum service training
  - Pfeiffer Vacuum service technician

## 2.7.3 Advanced training with Pfeiffer Vacuum

For optimal and trouble-free use of this product, Pfeiffer Vacuum offers a comprehensive range of courses and technical trainings.

For more information, please contact Pfeiffer Vacuum technical training.

# 3 Product description

## 3.1 Function

The turbopump forms a compact unit with the electronic drive unit. Pfeiffer Vacuum power supply packs provide the voltage supply.

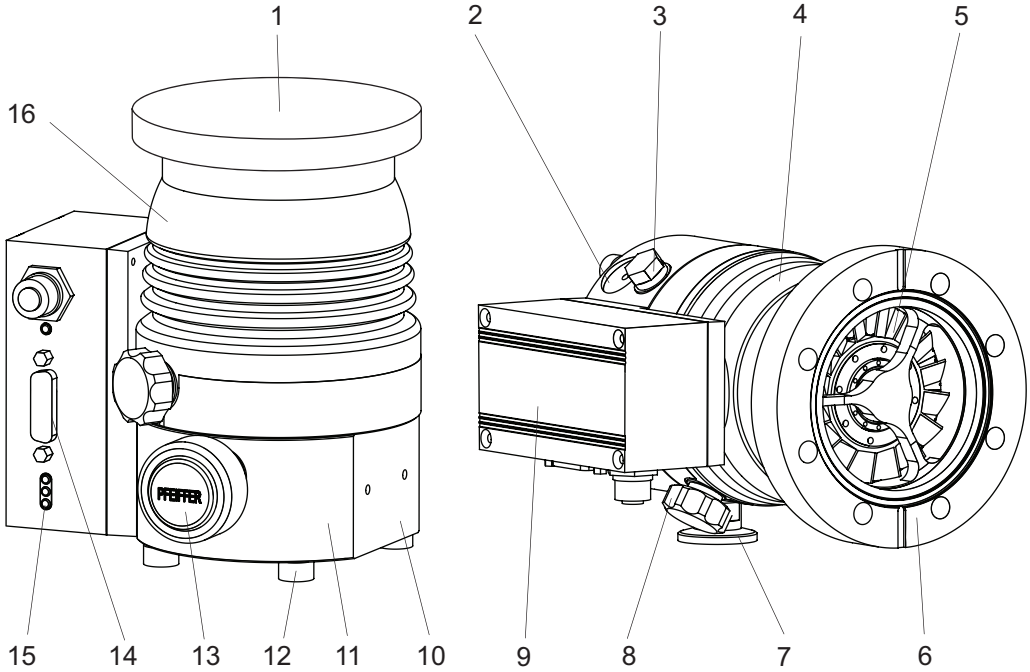


**Fig. 3: HiPace 80 design**

1 Protective cover for the high vacuum connection
2 Ground terminal
3 Sealing gas connection
4 Pump housing, stainless steel
5 Turbo rotor
6 High vacuum connection, here for example DN 63 CF-F
7 Fore-vacuum connection, DN 16 ISO-KF
8 Venting screw
9 Electronic drive unit TC 110
10 Mounting surface for water cooling
11 Pump base
12 Rubber-metal bumper
13 Protective cover for the fore-vacuum connection
14 Multifunction connection "X3"
15 LED operating mode display
16 Pump housing, aluminum

### 3.1.1 Cooling

- Convection cooling
- Air cooling (optional)
- Water cooling (optional)

The electronic drive unit automatically regulates the drive power down in the event of excessive temperatures.

### 3.1.2 Rotor bearing

Hybrid-bearing turbopump

- High vacuum side: wear-free permanent magnetic bearing
- Fore-vacuum side: ball bearing with ceramic balls

Permanent lubrication of the rotor bearing on the fore-vacuum side is ensured by an operating fluid reservoir.

### 3.1.3 Drive

- TC 110 electronic drive unit

## 3.2 Scope of delivery

- Turbopump with electronic drive unit
- Protective cover for the high vacuum connection
- Protective cover for the fore-vacuum connection
- Operating instructions

## 3.3 Identifying the product

► To ensure clear identification of the product when communicating with Pfeiffer Vacuum, always keep all of the information on the rating plate to hand.

► Learn about certifications through test seals on the product or at www.certipedia.com with company ID no. 000021320.

### 3.3.1 Product types

The product designation of Pfeiffer Vacuum turbopumps from the HiPace series is composed of the family name, the size (which is based on the pumping speed of the vacuum pump) and, if required, an additional feature description.

| Family | Size/model | Property, attribute, feature |
|---|---|---|
| HiPace | 10 to 2800 | **none** = Standard version |
| | | **mini** = Compact version |
| | | **U** = Overhead version |
| | | **C** = Corrosive gas version |
| | | **P** = Process |
| | | **M** = Active magnetic bearing |
| | | **T** = Temperature management |
| | | **Plus** = Low vibration, low magnetic field |
| | | **E** = High efficiency |
| | | **H** = High compression |
| | | **I** = Ion implantation |

**Tbl. 3: Product designation of Pfeiffer Vacuum HiPace turbopumps**

### 3.3.2 Product features

| Feature | Version | | |
|---|---|---|---|
| HV flange | DN 63 ISO-K | DN 63 CF-F | DN 40 ISO-KF |
| Flange material | Aluminium | Stainless steel | Aluminium |

**Tbl. 4: Turbopump features**

# 4 Transportation and Storage

## 4.1 Transport

**⚠ WARNING**

**Danger of serious injury due to falling objects**

Due to falling objects there is a risk of injuries to limbs through to broken bones.

- ► Take particular care and pay special attention when transporting products manually.
- ► Do not stack the products.
- ► Wear protective equipment, e.g. safety shoes.

**We recommend**

Pfeiffer Vacuum recommends keeping the transport packaging and original protective cover.

**Instructions for safe transport**

- ► Transport the turbopump only within the permissible temperature limits.
- ► Observe weight specified on the rating plate.
- ► Where possible, always transport or ship the turbopump in its original packaging.
- ► Always carry the turbopump with both hands.
- ► Remove the protective cover only immediately prior to installation.

## 4.2 Storage

**We recommend**

Pfeiffer Vacuum recommends storing the products in their original transport packaging.

**Storing the turbopump**

1. Seal all flange openings with the original protective caps.
2. Seal all other connections (e.g. venting connection) with the corresponding original parts.
3. Store the turbopump only indoors within the permissible temperature limits.
4. In rooms with humid or aggressive atmospheres: Hermetically seal the turbopump together with a drying agent in a plastic bag.

# 5 Installation

The installation of the turbopump and its fastening is of outstanding importance. The rotor of the turbopump revolves at very high speed. In practice it is not possible to exclude the risk of the rotor touching the stator (e.g. due to the penetration of foreign bodies into the high vacuum connection). The kinetic energy released acts on the housing and on the anchoring of the turbopump within fractions of a second.

Comprehensive tests and calculations conforming to ISO 27892 confirm the safety of the turbopump both against crashes (destruction of the rotor blade) and against bursting (breakage of the rotor shaft). The experimental and theoretical results are expressed in safety measures and recommendations for the correct and safe fastening of the turbopump.

## 5.1 Preparatory work

**⚠ WARNING**

**Risk of cuts on moving, sharp-edged parts when reaching into the open high vacuum flange**

With the high vacuum flange open, access to sharp-edged parts is possible. A manual rotation of the rotor increases the danger situation. There is the risk of cuts, up to the separation of body parts (e.g. fingertips). There is a risk of hair and loose clothing being drawn in. Objects falling in destroy the turbopump during subsequent operation.

- ► Only remove the original protective covers immediately prior to connecting the high vacuum flange.
- ► Do not reach into the high vacuum connection.
- ► Wear protective gloves during installation.
- ► Do not start the turbopump with open vacuum connections.
- ► Always carry out the mechanical installation before electrical connection.
- ► Prevent access to the high vacuum connection of the turbopump from the operator side (e.g. open vacuum chamber).

**General notes for the installation of vacuum components**

- ► Choose an installation location that permits access to the product and to supply lines at all times.
- ► Observe the ambient conditions given for the area of use.
- ► Provide the highest possible level of cleanliness during assembly.
- ► Ensure that flange components during installation are grease-free, dust-free and dry.

**Select the installation location**

1. Observe the instructions for transport to the installation location.
2. Make sure that there are sufficient cooling options for the turbopump.
3. Install suitable shielding if the surrounding magnetic fields exceed the permissible levels.
4. Install suitable shielding so that the irradiated thermal output does not exceed the permissible values when high temperatures occur due to the process.
5. Observe the permissible temperatures for the vacuum connection.

## 5.2 Connecting the high vacuum side

### 5.2.1 Requirements for the dimensioning of a counter flange

***NOTICE***

**Risk of damage due to incorrect counter flange design**

Unevenness on the operator-side counter flange results in stresses in the vacuum pump housing, even when properly attached. This can produce leakage or negative changes in running characteristics.

- ► Adhere to the shape tolerances for the counter flange.
- ► Observe the maximum flatness deviations over the entire surface.

**Superstructural parts and fittings on the high vacuum connection**

Installing superstructural parts and fittings to the high vacuum connection is the responsibility of the operating company. The loading capacity of the high vacuum flange is specific for the turbopump used.

- The total weight of superstructural parts must not exceed the maximum axial values specified.
- Make sure that all the torques generated if the rotor blocks suddenly, are absorbed by the system on the operator side and the high vacuum connection.
- Only use the approved mounting kits of Pfeiffer Vacuum for the high vacuum connection of the turbopump.

| Parameter | HiPace 80 |
|---|---|
| Maximum torque occurring in the event of a burst[1)] | 620 Nm |
| Maximum permissible axial load on the high vacuum flange[2)] | 200 N<br>(equivalent to 20 kg) |
| Flatness | ± 0.05 mm |
| Minimum tensile strength of the flange material in all operating states in relation to the engagement depth of the fixing screws | 170 N/mm$^2$ at 2.5 x d<br>270 N/mm$^2$ at 1.5 x d |
| Maximum permissible surrounding magnetic field | 3.3 mT<br>3.8 mT (water cooling) |
| Maximum permissible irradiated thermal output | 0.9 W<br>1.2 W (water cooling) |
| Maximum permissible rotor temperature | 90 °C |

**Tbl. 5: Requirements for the dimensioning of customer-specific high vacuum connection**

**Important information for correct installation**

► Only use the approved mounting kits of Pfeiffer Vacuum for the high vacuum connection of the turbopump.

### 5.2.2 Considering earthquake protection

**NOTICE**

**Vacuum pump damage caused by external vibrations**

In the event of earthquakes or other external vibrations, there is the risk of the rotor coming into contact with the safety bearings, or the housing wall touching the turbopump. This can produce mechanical loads up to and including destruction of the turbopump.

► Make sure that all flange and safety connections absorb the resulting forces.
► Secure the vacuum chamber against displacement or tipping.

1) The theoretically calculated torque in the event of a burst (rotor shaft breakage) according to ISO 27892 was not reached in any experimental test.

2) A one-sided load is not permitted.

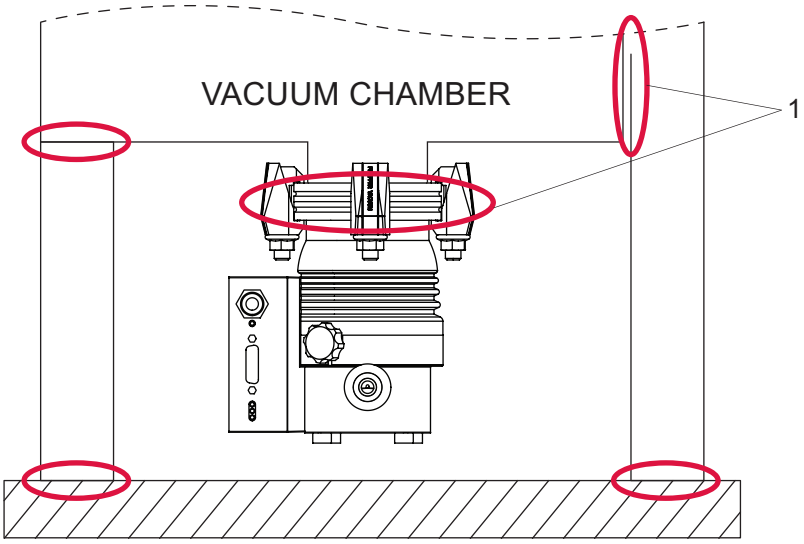


**Fig. 4: Example: Safety connections**

1 Safety connections, customer-side

## 5.2.3 Using a splinter shield or protective screen

Pfeiffer Vacuum centering rings with splinter shield or protective screen in the high vacuum flange protect the turbopump against foreign matter from the vacuum chamber. The pumping speed of the turbopump reduces according to the passage guide values and the size of the high vacuum flange.

| Flange size | Reduced pumping speed in % for the gas type | | | |
|---|---|---|---|---|
| | $H_2$ | He | $N_2$ | Ar |
| Splinter shield DN 40 | 6 | 9 | 17 | 18 |
| Splinter shield DN 63 | 3 | 6 | 15 | 16 |
| Protective screen DN 63 | 1 | 1 | 4 | 4 |

**Tbl. 6: Effect of splinter shield or protective screen on pumping speed**

**Procedure**

1. With ISO flanges, use centering rings with protective screen or splinter shield.
2. For CF flanges, always insert protective screen or splinter shield with the clamping lugs pointing towards the rotor in the high vacuum flange.

## 5.2.4 Using the vibration compensator

Pfeiffer Vacuum vibration compensators are suitable for use on vibration-sensitive systems.

**⚠ WARNING**

**Risk of injury caused by the turbopump breaking away with the vibration compensator in the event of a malfunction**

Sudden jamming of the rotor generates high destructive torques in accordance with ISO 27892. When using a vibration compensator, this will probably lead to the turbopump being sheared off in use. The energy that this would release could throw the entire turbopump or shattered pieces from its interior through the surrounding space. Potentially dangerous gases can escape. There is a risk of very serious injuries, including death, and extensive property damage.

- ► Take suitable safety precautions on-site for the compensation of the occurring torques.
- ► Before installing a vibration compensator, you must first of all contact Pfeiffer Vacuum.

**Installing the vibration compensator**

1. Install the vibration compensator only with vertical passage.
2. Consider the flow resistance.

3. Secure the turbopump additionally to the high vacuum flange.
4. Observe the fastening of the ISO flanges.

### 5.2.5 Mounting orientations

Pfeiffer Vacuum turbopumps from the HiPace series are suitable for use with dry compressing backing pumps for mounting in **all** orientations.

► When using oil-sealed backing pumps, avoid backflow from the fore-vacuum range.

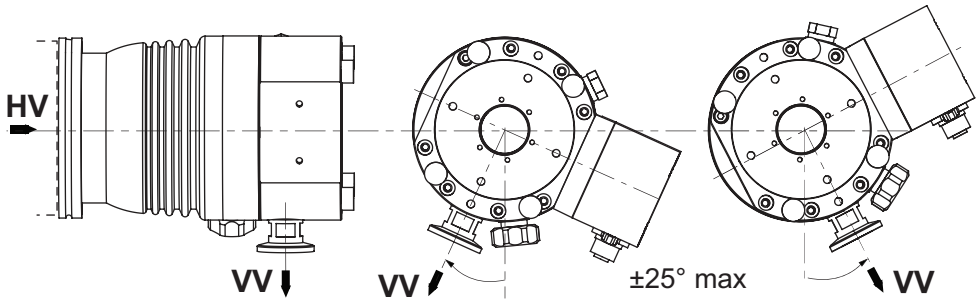


**Fig. 5: Recommended alignment when using oil-sealed backing pumps**

**Specify a horizontal mounting orientation for oil-sealed backing pumps**

1. Always align the fore-vacuum connection downwards vertically.
   – Permissible deviation ± 25°
2. Support the tube connections in front of the turbopump.
3. Do not allow any forces from the piping system to act on the turbopump.
4. Do not load the high vacuum flange of the turbopump on one side.

### 5.2.6 Installation of ISO-KF flange

**ISO flange connections**

For the connection of flanges in ISO-KF or ISO-K design, twisting may occur in the event of sudden blockage of the rotor, despite correct installation.

- Leak-tightness of the flange connection, however, is not jeopardized in this regard.

**Required tools**

- Allen key
- Calibrated torque wrench (Tightening factor ≤ 1.6)

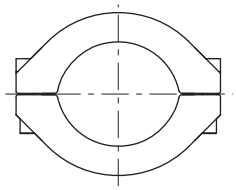

**Fig. 6: Flange connection ISO-KF to ISO-KF**

**Using of clamping ring**

1. Only use the approved mounting kits from Pfeiffer Vacuum for the connection.
2. Fasten the high vacuum connection on the turbopump and the clamping ring to the counter flange.
3. Utilize all prescribed components for the turbopump.
4. Tighten the clamping ring screws evenly.
   – Tightening torque: **3,7 Nm**.

## 5.2.7 Attaching ISO-K flange onto ISO-K

**ISO flange connections**

For the connection of flanges in ISO-KF or ISO-K design, twisting may occur in the event of sudden blockage of the rotor, despite correct installation.

- Leak-tightness of the flange connection, however, is not jeopardized in this regard.

**Required tools**

- Wrench, WAF 15
- Calibrated torque wrench (Tightening factor ≤ 1.6)

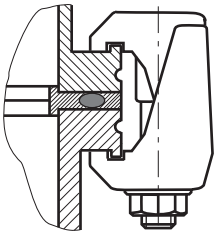

**Fig. 7: Flange connection ISO-K to ISO-F, bracket screws**

**Connection with bracket screw**

1. For the connection of the turbopump, use only the approved mounting kits from Pfeiffer Vacuum.
2. Connect the flange with the components of the mounting kit according to the figure.
3. Use for all prescribed components for the turbopump.
4. Tighten the bracket screws cross-wise in 3 steps.
   – Tightening torque: **5, 15, 25 ± 2 Nm**

## 5.2.8 Installation of ISO-K flange onto ISO-F

The connection types for the installation of ISO-K with ISO-F flange are:

- "Claw and tapped hole"
- "Hexagon head set screw and tapped hole"
- "Stud screw and tapped hole"
- "Stud screw and through-bore"

**ISO flange connections**

For the connection of flanges in ISO-KF or ISO-K design, twisting may occur in the event of sudden blockage of the rotor, despite correct installation.

- Leak-tightness of the flange connection, however, is not jeopardized in this regard.

**Connection of claw and tapped hole**

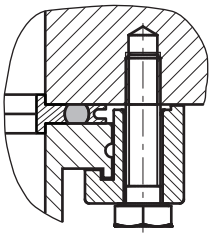

1. Only use the approved mounting kits from Pfeiffer Vacuum for the connection.
2. Connect the flange according to the diagram using the components in the mounting kit.
3. Utilize all prescribed components for the turbopump.
4. Tighten the claws in 3 stages in opposite pairs.
   – Tightening torque: **5, 10, 16 ± 1 Nm**

**Connection of hexagon head set screw and tapped hole**

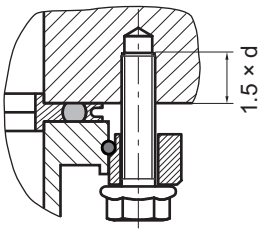


1. Only use the approved mounting kits from Pfeiffer Vacuum for the connection.
2. Place the collar flange over the high vacuum flange on the turbopump.
3. Insert the snap ring into the side groove on the high vacuum flange of the turbopump.
4. Fasten the turbopump onto the counter flange in accordance with the diagram using the collar flange, snap ring and centering ring.
5. Utilize all prescribed components for the turbopump.
6. Screw the hexagon head set screws into the tapped holes.
   – Observe the minimum tensile strength of the flange material and the screw-in depth.
7. Tighten the hexagon head set screws in 3 stages in opposite pairs.
   – Tightening torque: **5, 10, 16 ± 1 Nm**

**Connection of stud screw and tapped hole**

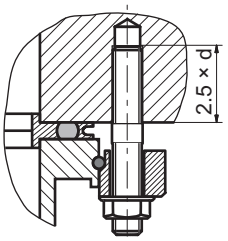


1. Only use the approved mounting kits from Pfeiffer Vacuum for the connection.
2. Screw the required number of stud screws with the shorter screw-in end into the holes in the counter flange.
   – Observe the minimum tensile strength of the flange material and the screw-in depth.
3. Place the collar flange over the high vacuum flange on the turbopump.
4. Insert the snap ring into the side groove on the high vacuum flange of the turbopump.
5. Fasten the turbopump onto the counter flange in accordance with the diagram using the collar flange, snap ring and centering ring.
6. Utilize all prescribed components for the turbopump.
7. Tighten the nuts in 3 stages in opposite pairs.
   – Tightening torque: **5, 10, 16 ± 1 Nm**

**Connection of stud screw and through-bore**

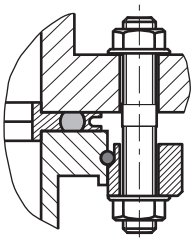

1. Only use the approved mounting kits from Pfeiffer Vacuum for the connection.
2. Place the collar flange over the high vacuum flange on the turbopump.
3. Insert the snap ring into the side groove on the high vacuum flange of the turbopump.
4. Fasten the turbopump onto the counter flange in accordance with the diagram using the collar flange, snap ring and centering ring.
5. Utilize all prescribed components for the turbopump.
6. Tighten the nuts in 3 stages in opposite pairs.
7. Tightening torque: **5, 10, 16 ± 1 Nm**

## 5.2.9 Attaching CF flange to CF-F

The connection types for CF installation with CF flange are:

- "Hexagon head screw and through hole"
- "Stud screw with tapped hole"
- "Stud screw with through hole"

**NOTICE**

**Leaks may occur due to the incorrect installation of CF flanges**

Inadequate cleanliness when handling CF flanges and copper gaskets results in leaks and may cause process damage.

► Always wear suitable gloves before touching or fitting any components.
► Fit seals only if dry and free of grease.
► Take care of damaged surfaces and cut edges.
► Replace the damaged components.

**Required tools**

- Hexagonal wrench (13 WAF)
- Calibrated torque wrench (tightening factor ≤ 1.6)

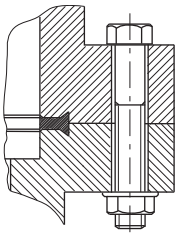

**Fig. 8: Flange connection CF-F, hexagon head screw and through hole**

**Connection of the hexagon head screw and through holes**

1. For the connection of the turbopump, use only the approved mounting kits from Pfeiffer Vacuum.
2. If used: Insert the protective screen or splinter shield with clamping lugs downwards in the turbopump high vacuum flange.
3. Place the seal exactly in the hollow.
4. Connect the flange with the components of the mounting kit according to the figure.
5. Tighten the screw couplings all the way around.
   – Tightening torque: **22 ± 2 Nm**
6. Then check the torque, since flowing of the sealing material may make it necessary to re-tighten the screws.

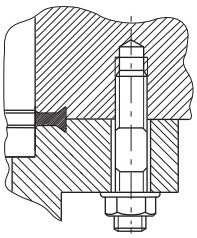

**Fig. 9: Flange connection CF-F, stud screw and tapped hole**

**Connection of the stud screw and tapped hole**

1. For the connection of the turbopump, use only the approved mounting kits from Pfeiffer Vacuum.
2. Screw in the required number of stud screws with the shorter end in the holes on the counter flange.
3. If used: Insert the protective screen or splinter shield with clamping lugs downwards in the turbopump high vacuum flange.
4. Place the seal exactly in the hollow.
5. Connect the flange with the components of the mounting kit according to the figure.
6. Tighten the screw couplings all the way around.
   – Tightening torque: **22 ± 2 Nm**
7. Then check the torque, since flowing of the sealing material may make it necessary to re-tighten the screws.

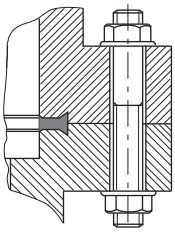

**Fig. 10: Flange connection CF-F, stud screw and through hole**

**Connection of the stud screw and through hole**

1. For the connection of the turbopump, use only the approved mounting kits from Pfeiffer Vacuum.
2. If used: Insert the protective screen or splinter shield with clamping lugs downwards in the turbopump high vacuum flange.
3. Place the seal exactly in the hollow.
4. Connect the flange with the components of the mounting kit according to the figure.
5. Tighten the screw couplings all the way around.
   – Tightening torque: **22 ± 2 Nm**
6. Then check the torque, since flowing of the sealing material may make it necessary to re-tighten the screws.

## 5.3 Connecting the fore-vacuum side

**⚠ WARNING**

**Danger to life from poisoning where toxic process media leak from damaged connections**

Sudden twisting of the turbopump in the event of a fault causes fittings to accelerate. There is the risk of damaging on-site connections (e.g., fore-vacuum line) and resulting leaks. This results in leakage of process media. In processes involving toxic media, there is a risk of injury and danger to life due to poisoning.

- ► Keep masses connected to the turbopump as low as possible.
- ► Use flexible lines to connect to the turbopump where necessary.

**Suitable backing pump**

Use the turbopump only in combination with a suitable backing pump that can deliver up to the required maximum fore-vacuum pressure. To achieve the fore-vacuum pressure, use a suitable vacuum pump or a pumping station from the Pfeiffer Vacuum range.

In this case, the backing pump is also controlled directly via the turbopump electronic drive unit interfaces (e.g., relay box or connection cable).

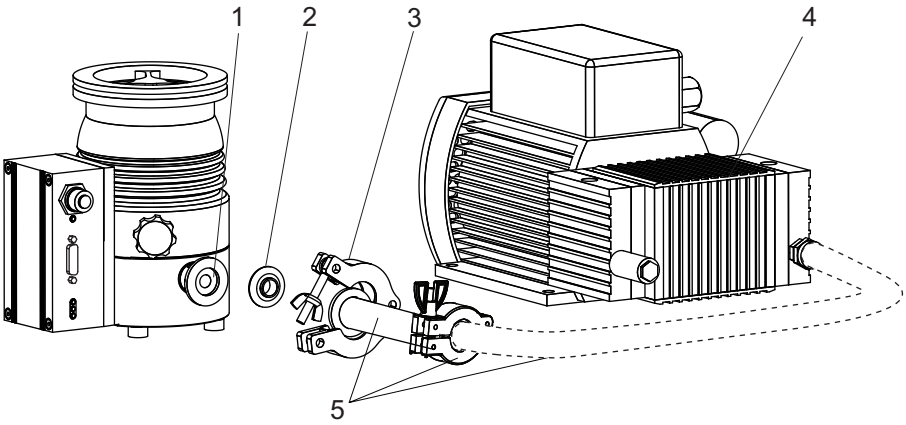


**Fig. 11: Example of fore-vacuum connection on HiPace 80**

1 Turbopump fore-vacuum connection
2 Centering ring
3 Circlip
4 Backing pump (e.g., diaphragm pump)
5 Vacuum components DN 16 ISO-KF

**Establishing the fore-vacuum connection**

1. With rigid pipe connections, include bellows to attenuate external vibrations.
2. Install a fore-vacuum connection with small flange components, e.g., fasteners and pipe components DN 16 ISO-KF, from the Pfeiffer Vacuum Components Shop.
3. Implement measures to counteract the backflow of operating fluids or condensate from the fore-vacuum area.
4. Observe the information in the operating instructions of the backup pump or pumping station when connecting and operating it.

## 5.4 Connecting accessories

**Installation and operation of accessories**

Pfeiffer Vacuum offers a series of special, compatible accessories for its products.

- Information and ordering options for approved accessories for hybrid bearing turbo-pumps can be found online.

**Connect accessory devices to the TC 110**

- The use of Pfeiffer Vacuum accessories via the TC 110 electronic drive unit is only possible using the corresponding connection cable and/or adapter on the X3 multi-functional connection.
- Configure the required accessory output via RS-485 using Pfeiffer Vacuum display and control units or PC.

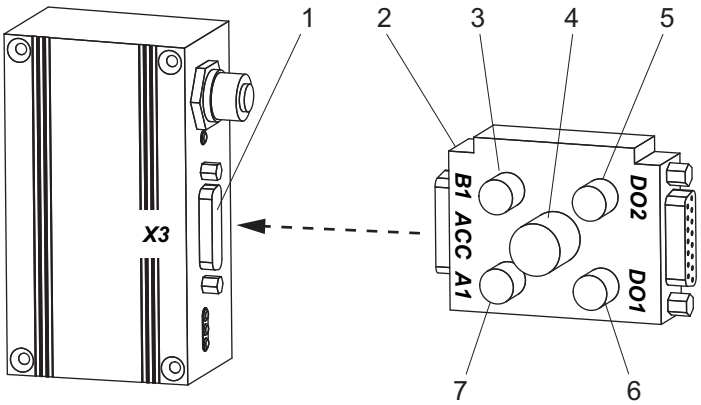


**Fig. 12: Example of accessory connection via adapter TCS 12**

1 Multifunction connection X3
2 Adapter TCS
3 Accessory connection B1
4 Connection RS-485
5 Digital output DO2
6 Digital output DO1
7 Accessory connection A1

**Connecting pre-configured accessories**

- ► Observe the installation instructions in the operating instructions for the relevant accessory.
- ► Note the existing configuration of existing connections and control lines.
- ► Connect only matching accessory devices to the electronic drive unit.

**Using additional accessories**

- ► Observe the installation instructions in the operating instructions for the relevant accessory.
- ► Note the existing configuration of existing connections and control lines.
- ► Use the Pfeiffer Vacuum display and control unit DCU 002, or a DCU with integrated power supply pack.

## 5.5 Connecting the electrical supply

**⚠ WARNING**

**Risk of danger to life through missing mains disconnection device**

The vacuum pump and electronic drive unit are **not** equipped with a mains disconnection device (mains switch).

- ► Install a mains disconnection device according to SEMI-S2.
- ► Install a circuit breaker with an interruption rating of at least 10,000 A.

**⚠ WARNING**

**Risk of injury due to incorrect installation**

Dangerous situations may arise from unsafe or incorrect installation.

- ► Do not carry out your own conversions or modifications on the unit.
- ► Ensure the integration into an Emergency Off safety circuit.

### 5.5.1 Earthing the turbopump

Pfeiffer Vacuum recommends connecting a suitable grounding cable to discharge applicative interferences.

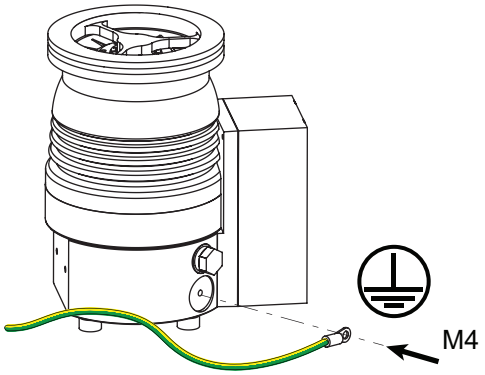


**Fig. 13: Example: Connecting the grounding cable**

**Procedure**

1. Use the turbopump ground terminal (M4 female thread).
2. Route the connection in accordance with locally applicable provisions.

### 5.5.2 Establishing the electric connection

**⚠ DANGER**

**Danger to life from electric shock**

Power supply packs that are not specified or are not approved will lead to severe injury to death.

- ► Make sure that the power supply pack meets the requirements for double isolation between mains input voltage and output voltage, in accordance with IEC 61010 and IEC 60950.
- ► Make sure that the power supply pack meets the requirements in accordance with IEC 61010 and IEC 60950.
- ► Where possible, use original power supply packs or only power supply packs that correspond with the applicable safety regulations.

**⚠ WARNING**

**Danger of cut injuries from unexpected start up.**

The use of mating plugs of the electronic drive unit (accessories) enables the automatic run-up of the vacuum pump as soon the power is turned on. Attaching mating plugs before or during the installation leads to the movement of parts hence the risk of cut injuries by sharp-edged in the exposed high vacuum flange.

- ► Only connect mating plugs after the mechanical installation.
- ► Only switch on the vacuum pump immediately prior to operation.

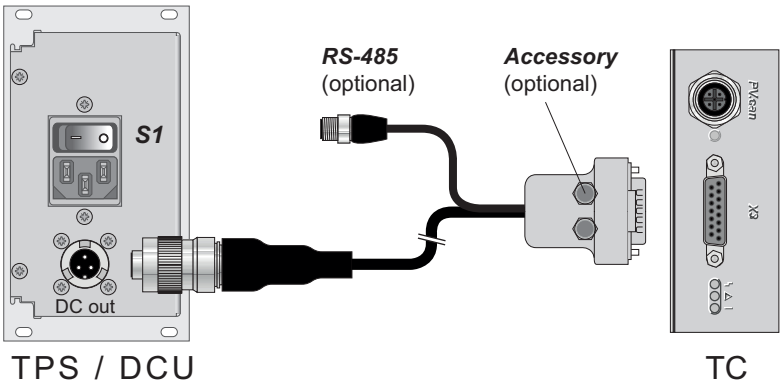


**Fig. 14: Connecting the electronic drive unit to a power supply pack**

Original power supply packs (e.g. TPS 110 or DCU 110) and connection cable are available for electronic drive unit TC 110 voltage supply.

| Type of connection cable | Function |
|---|---|
| Connection cable with RS-485 interface and bridges from TC 110\|TC 120 to power supply unit | • Power supply via power supply unit<br>• Automatic startup via bridges on pins 2, 5, 7<br>• Connection to display and control unit via RS-485 |
| Connection cable with RS-485 interface and accessory connections from TC 110\|TC 120 to power supply unit | • Power supply via power supply unit<br>• Connection of accessory devices with M8 plug<br>• Connection to display and control unit via RS-485 |
| Connection bridges from TC 110\|TC 120 to power supply unit | • Power supply via power supply unit<br>• Automatic startup via bridges on pins 2, 5, 7 |
| Connection cable with bridges and accessory connections from TC 110\|TC 120 to power supply unit | • Power supply via power supply unit<br>• Automatic startup via bridges on pins 2, 5, 7<br>• Connection of accessory devices with M8 plug |

**Connecting the electronic drive unit**

1. Make sure that you have the correct supply voltage.
2. Make sure that the “S1” power supply pack master switch is off prior to connection.
3. Plug the 15-pole connection cable plug into the "X3" connection on the electronic drive unit and secure it.
4. Plug the connecting socket with the bayonet catch into the “DC out” connection on the power supply pack, and lock it.
5. **When using a display and control unit:** Connect the “RS-485” connector of a suitable connection cable to the display and control unit.

# 6 Operation

## 6.1 Commissioning

**⚠ WARNING**

**Danger of cut injuries from unexpected start up.**

The use of mating plugs of the electronic drive unit (accessories) enables the automatic run-up of the vacuum pump as soon the power is turned on. Attaching mating plugs before or during the installation leads to the movement of parts hence the risk of cut injuries by sharp-edged in the exposed high vacuum flange.

- ► Only connect mating plugs after the mechanical installation.
- ► Only switch on the vacuum pump immediately prior to operation.

***NOTICE***

**Vacuum pump destruction due to excessive energy input during operation**

Simultaneous loading by means of high drive power (gas throughput, fore-vacuum pressure), high heat radiation, or strong magnetic fields results in uncontrolled heating of the rotor and can destroy the vacuum pump.

- ► Consult Pfeiffer Vacuum before combining varying loads on the vacuum pump. Lower limit values apply.

***NOTICE***

**Turbopump destruction due to gases with too high molecular masses**

The pumping of gases with impermissible high molecular masses leads to the destruction of the turbopump.

- ► Make sure that the gas mode is set correctly by **[P:027]** in the electronic drive unit.
- ► Consult Pfeiffer Vacuum before you use gases with higher molecular masses (> 80).

Important settings and function-related variables are factory-programmed into the vacuum pump electronic drive unit as parameters. Each parameter has a three-digit number and a description. Parameter-driven operation and control is supported via Pfeiffer Vacuum displays and control units, or externally via RS-485 using Pfeiffer Vacuum protocol.

| Parameter | Name | Designation | Adjustment, setting |
|---|---|---|---|
| **[P:027]** | GasMode | Gas mode | 0 = heavy gases |
| **[P:035]** | CfgAccA1 | Accessory connection A1 | 0 = fan (continuous operation) |
| **[P:036]** | CfgAccB1 | Accessory connection B1 | 1 = venting valve |
| **[P:700]** | RUTimeSVal | Set value run-up time | 8 min. |
| **[P:701]** | SpdSwPt1 | Rotation speed switch point 1 | 80 % |
| **[P:707]** | SpdSVal | Speed-control operation specification | 65 % |
| **[P:708]** | PwrSVal | Set value power consumption | 100 % |
| **[P:720]** | VentSpd | Venting at rotation speed, delayed venting | 50 % |
| **[P:721]** | VentTime | Venting time, delayed venting | 3600 s |

**Tbl. 7: Factory setting of the electronic drive unit for turbopumps when delivered**

**Notes for turbopump commissioning**

1. When using water cooling, observe the cooling water flow and throughput.
2. When using sealing gas, observe the sealing gas flow and throughput.
3. Provide the current supply for the power supply pack.

## 6.2 Operating modes

The turbopump can be operated in different modes.

- Operation without control unit
- Operation via connection "E74"
- Operation via "remote" connection
- Operation via interface RS-485 and Pfeiffer Vacuum display and control unit or PC
- Operation via field bus

### 6.2.1 Operation without operating unit

**Automatic start**

The turbopump starts up immediately on bridging the pin 2, 5, 7 contacts on the "X3" connection or using the a connection cable "with bridges" and running the supply voltage.

**Notes on operation without control unit**

1. Only use the approved Pfeiffer Vacuum connection cables with bridges on the "X3" connection on the electronic drive unit.
2. Only switch on the power supply of the turbopump immediately before operation.

After applying the operating voltage, the electronic drive unit carries out a self-test to check the supply voltage. After completing the self-test successfully, the turbopump starts and activates connected additional equipment according to the configuration.

### 6.2.2 Operation via multi-function connection "X3"

Remote control is available via the 15 Pole D-Sub connection with the “X3” designation on the electronic drive unit. The accessible individual functions are mapped to "PLC levels".

**Instructions for remote control operation**

► See the electronic drive unit operating instructions.

### 6.2.3 Operation via Pfeiffer Vacuum display and control unit

The connection of a Pfeiffer Vacuum display and control panel permits the controlling of the turbopump via the parameters fixed in the electronic drive unit.

**Instructions for operation with display and control unit**

1. When handling the Pfeiffer Vacuum display and control unit, observe the associated operating instructions:
   – "DCU" operating instructions available from the Download Center.
   – "HPU" operating instructions available from the Download Center.
2. Observe the electronic drive unit operating instructions from the turbopump scope of delivery.
3. Connect the “RS-485” connector of a suitable connection cable to the DCU.
4. Switch on the turbopump current supply via the external power supply pack or the DCU with integrated power supply pack.

### 6.2.4 Operation via field bus

Integrating and operating Pfeiffer Vacuum turbopumps in the customer's field bus system is possible when using an electronic drive unit with a corresponding connection panel.

**The following are available:**

- Profibus

**Instructions for field bus operation**

► See the operating manual of the electronic drive unit with corresponding connection panel.

## 6.3 Switching on the turbopump

**⚠ WARNING**

**Danger of cut injuries from unexpected start up.**

The use of mating plugs of the electronic drive unit (accessories) enables the automatic run-up of the vacuum pump as soon the power is turned on. Attaching mating plugs before or during the installation leads to the movement of parts hence the risk of cut injuries by sharp-edged in the exposed high vacuum flange.

- ► Only connect mating plugs after the mechanical installation.
- ► Only switch on the vacuum pump immediately prior to operation.

**⚠ WARNING**

**Risk of burns on hot surfaces when using additional equipment for heating during operation**

The use of additional equipment for heating the vacuum pump or for optimizing the process generates very high temperatures on surfaces that can be touched. There is a risk of burning.

- ► If necessary, set up a contact guard.
- ► If necessary, apply the warning stickers provided for this at the danger points.
- ► Ensure adequate cooling down before working on the vacuum pump or in its vicinity.
- ► Wear protective equipment, e.g., gloves.

**⚠ WARNING**

**Risk of serious injury in the event of vacuum pump destruction due to over pressure**

Gas entry with very high over pressure results in destruction of the vacuum pump. There is a risk of serious injury due to ejected objects.

- ► Never exceed the permissible 1500 hPa (absolute) inlet pressure on the suction side or the venting and sealing gas connection.
- ► Make sure that high, process-related over pressures cannot directly enter the vacuum pump.

**Switching on the turbopump**

- ► Connect the power supply pack to the mains power supply on the customer-side.
- ► Switch on the power supply pack.

## 6.4 Operation monitoring

### 6.4.1 Operating mode display via LED

LEDs on the electronic drive unit show the basic operating states of the vacuum pump. A differentiated error and warning display is only possible for operation with the Pfeiffer Vacuum display and control unit or a PC.

| LED | Symbol | LED status | Display | Meaning |
|---|---|---|---|---|
| Green | | Off | | Currentless |
| | | On, flashing | | "pumping station OFF", rotation speed ≤ 60 rpm |
| | | On, inverse flashing | | "pumping station ON", set rotation speed not reached |
| | | On, constant | | "pumping station ON", set rotation speed reached |
| | | On, flashing | | "pumping station OFF", speed > 60 rpm |
| Yellow | | Off | | No warning |
| | | On, constant | | Warning |

| LED | Symbol | LED status | Display | Meaning |
|---|---|---|---|---|
| Red | ϟ | Off | | No error, no warning |
| | | On, constant | | Error, malfunction |

**Tbl. 8: Behavior and meaning of the LEDs on the electronic drive unit**

### 6.4.2 Temperature monitoring

If threshold values are exceeded, output signals from temperature sensors bring the turbopump to a safe condition. Depending on the type, temperature thresholds for warning and error messages are immutably stored in the electronic drive unit. For information purposes, various status requests are set up in the parameter set.

- In order to avoid switching off the turbopump, the electronic drive unit already reduces the power consumption in case of exceeding the warning threshold for excess temperature.
  - Examples are an impermissible motor temperature, or impermissibly high housing temperature.
- Further reduction of drive power and thus decreasing speed can potentially lead to underrun the rotation speed switchpoint. The turbopump switches off.
- Exceeding the temperature threshold for error messages switches off the turbopump immediately.

## 6.5 Switching off and venting

**We recommend**

Vent the turbopump after shutdown. By doing so, you prevent particles flowing back into the vacuum system from the fore-vacuum area.

### 6.5.1 Switching off

**Notes for switching off the turbopump**

1. Shut down the turbopump via the control unit or remote control.
2. Close the fore-vacuum line.
3. Switch off the backing pump, if necessary.
4. Vent the turbopump (options see below).
5. Close the supply lines (e.g. for cooling water or sealing gas).

### 6.5.2 Venting

**⚠ CAUTION**

**Risk of injuries due to contact with vacuum when venting**

While venting the vacuum pump there is a risk of minor injuries due to the direct contact of body parts with the vacuum, e.g. hematomas.

- ► Do not fully unscrew the venting screw out of the housing during venting.
- ► Keep a distance from automatic venting device, such as venting valves.

***NOTICE***

**Damage to the turbopump due to non-permissibly fast pressure rise during venting**

Non-permissibly high pressure rise rates place a significant load on the rotor and the magnetic bearing of the turbopump. During venting very small volumes in the vacuum chamber or the turbopump, there is a risk of uncontrollable pressure rises. This causes mechanical damage to the turbopump, including potential failure.

- ► Observe the prescribed maximum pressure rise speed of **15 hPa/s**.
- ► Avoid manual and uncontrolled venting of very low volumes.
- ► Where necessary, use a venting valve from the Pfeiffer Vacuum range of accessories.

### Manual venting

Manual venting describes the standard process for venting the turbo pumping station.

1. Ensure that the vacuum system is shut down.
2. Open the black venting screw on the turbopump by one revolution maximum.
3. Wait for pressure equalization to atmospheric pressure in the vacuum system.
4. Close the venting screw again.

### Use a Pfeiffer Vacuum venting valve

The Pfeiffer Vacuum venting valve is an optional accessory for installation on the turbopump.

The venting valve is normally closed. Control is via the turbopump electronic drive unit, and configuration of parameters **[P:012]** and **[P:030]**. In the event of a power failure, the turbopump continues to deliver sufficient energy during its run-down period to initiate a proper venting process. When power is restored, the venting process is interrupted.

► Switch off the turbopump.
  – The venting process starts automatically.

| Venting speed [P:720] | Venting duration [P:721] | Venting duration in the event of a power failure |
|---|---|---|
| 50 % of rated speed | 3600 s | 3600 s |

**Tbl. 9: Factory settings for delayed venting in turbopumps**

### General information for fast venting

We recommend fast venting of larger volumes in 4 steps.

1. Use a Pfeiffer Vacuum venting valve for the turbopump, or match the valve cross-section to the size of the recipient and maximum venting rate.
2. Vent the vacuum system with a maximum rate of pressure rise of **15 hPa/s** for a duration of 20 seconds.
3. Then vent the system with a second venting valve of any size; for example, directly at the vacuum chamber.
4. Wait for pressure equalization to atmospheric pressure in the vacuum system.

# 7 Maintenance

## 7.1 General maintenance information

**⚠ WARNING**

**Danger to life from electric shock during maintenance and service work**

The device is only completely de-energized when the mains plug has been disconnected and the turbopump is at a standstill. There is a danger to life from electric shock when making contact with live components.

- ► Before performing all work, switch off the main switch.
- ► Wait until the turbopump comes to a standstill (rotation speed =0).
- ► Remove the mains plug from the device.
- ► Secure the device against unintentional restarting.

**⚠ WARNING**

**Health hazard through poisoning from toxic contaminated components or devices**

Toxic process media result in contamination of devices or parts of them. During maintenance work, there is a risk to health from contact with these poisonous substances. Illegal disposal of toxic substances causes environmental damage.

- ► Take suitable safety precautions and prevent health hazards or environmental pollution by toxic process media.
- ► Decontaminate affected parts before carrying out maintenance work.
- ► Wear protective equipment.

**⚠ WARNING**

**Risk of cuts on moving, sharp-edged parts when reaching into the open high vacuum connection**

Incorrect handling of the turbopump before maintenance work results in hazardous situations with risk of injury. There is a risk of cuts from accessing sharp-edged, rotating parts when removing the turbopump.

- ► Wait until the turbopump comes to a standstill (rotation speed f=0).
- ► Switch the turbopump off properly.
- ► Secure the turbopump against re-start.
- ► Seal open connections immediately following removal, using the original protective cover.

## 7.2 Maintenance intervals and responsibilities

**Recommendations for performing maintenance measures**

1. Clean the turbopump exterior with a lint-free cloth and a little isopropanol.
2. Replace the electronic drive unit as an independent unit.
3. Replace the operating fluid reservoir as an independent unit.
4. Pay attention to when the operating fluid must be changed.
5. Change the operating fluid reservoir at least every 4 years.
6. Have Pfeiffer Vacuum Service replace the rotor bearing of the turbopump at least every 4 years.
7. Consult with Pfeiffer Vacuum Service about shorter maintenance intervals for extreme loads or impure processes.
8. For all other cleaning, maintenance or repair work, contact the appropriate Pfeiffer Vacuum Service location.

## 7.3 Replacing the operating fluid reservoir

**⚠ WARNING**

**Risk of poisoning from contact with harmful substances**

The operating fluid reservoir and parts of the turbopump may contain toxic substances from pumped media.

- ► Decontaminate affected parts before carrying out maintenance work.
- ► Prevent health hazards or environmental impacts with adequate safety precautions.
- ► Observe the operating fluid safety data sheet.
- ► Dispose of the operating fluid reservoir according to applicable regulations.

***NOTICE***

**Damage to sealing surfaces from unsuitable tools**

The use of unsuitable tools for removal or insertion of sealing rings damages the sealing surfaces, causing vacuum pump leakage.

- ► Never use sharp, metallic tools (e.g., tweezers).
- ► Only remove sealing rings with an O-ring picker.

You can find the safety data sheet in the Pfeiffer Vacuum Download Center.

**Prerequisites**

- Turbopump switched off
- Vacuum system vented to atmospheric pressure
- Electrical supply disconnected
- All cables disconnected from the electronic drive unit
- All openings sealed with the original protective covers, and where available screw plugs

### 7.3.1 Removing the operating fluid reservoir

**Required consumables**

- Clean, lint-free cloth
- Laboratory gloves

**Required tools**

- Wrench, WAF 17
- Special tool (order number: PV M40 813)
- Tweezers
- O-ring picker
- Screwdriver

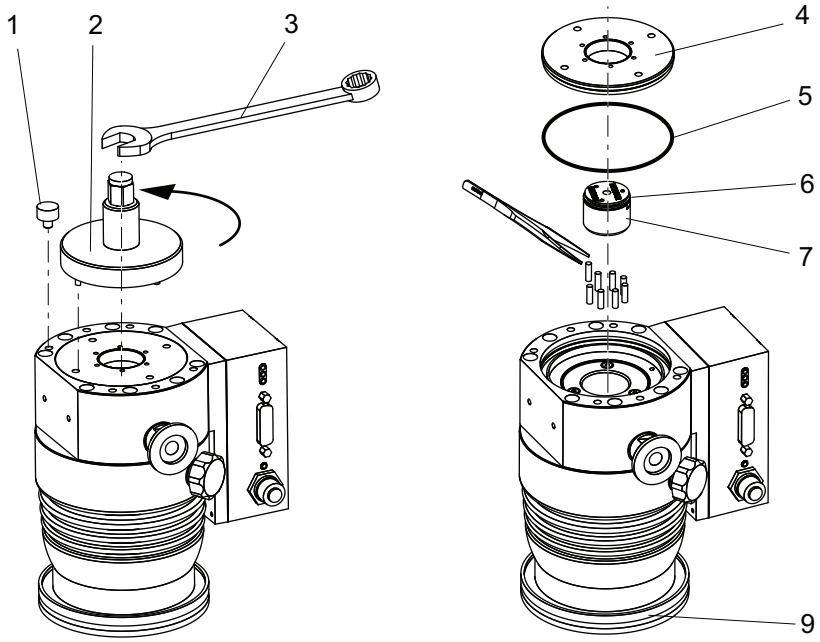


**Fig. 15: Removing the operating fluid reservoir**

1 Rubber-metal bumper
2 Special tool
3 Wrench
4 Screw cap
5 O-ring
6 O-ring, operating fluid reservoir
7 Operating fluid reservoir
8 Capillary rod (8×)
9 Protective cover

**Removing the operating fluid reservoir**

1. Wear laboratory gloves to avoid skin contact.
2. Place the turbopump on the closed high vacuum flange.
3. Unscrew the rubber-metal pad from the pump base.
4. Unscrew the screw cap using the special tool.
5. Be careful with the O-ring; use an O-ring picker to remove if needed.
6. Lift the operating fluid reservoir out of the bearing housing with two screwdrivers.
7. Pull the old capillary rods (8×) out of the pump base with the tweezers.
8. Clean the screw cap with a clean, lint-free cloth.
   – Do **not use cleaning agents**.

## 7.3.2 Installing the operating fluid reservoir

**Required consumables**

- Laboratory gloves
- Operating fluid reservoir

**Required tools**

- Wrench, **WAF 17**
- Special tool (order number: PV M40 813)
- Tweezers
- Screwdriver
- Calibrated torque wrench (tightening factor ≤ 1.6)

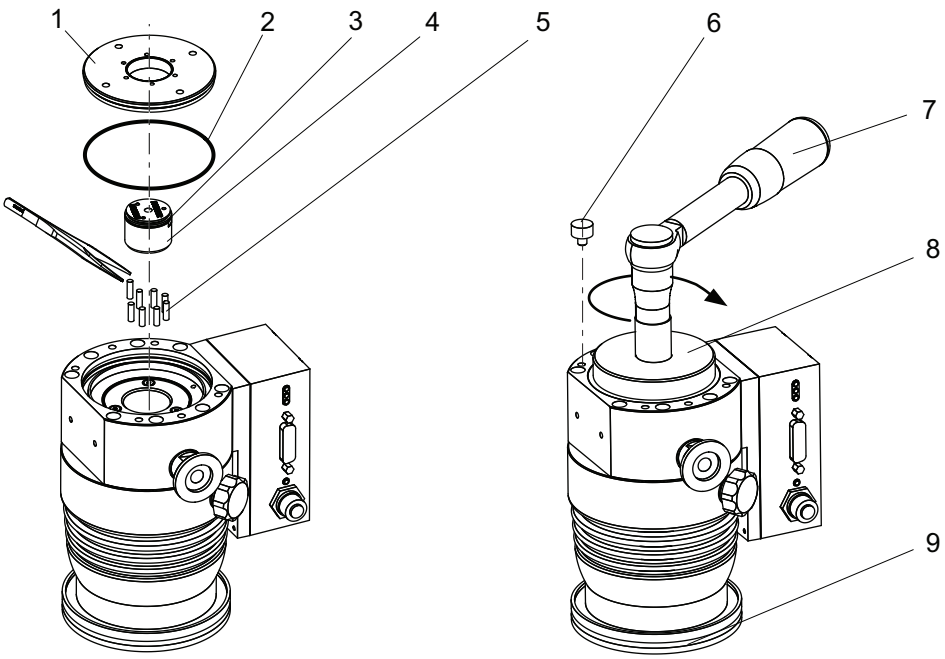


**Fig. 16: Installing the operating fluid reservoir**

1 Screw cap
2 O-ring
3 O-ring, operating fluid reservoir
4 Operating fluid reservoir
5 Capillary rod (8×)
6 Rubber-metal bumper
7 Torque wrench
8 Special tool
9 Protective cover

**Installing the operating fluid reservoir**

1. Insert all new capillary rods with the tweezers.
2. Insert the new operating fluid reservoir up to its O-ring in the bearing housing.
   – When doing so, do **not** exert pressure on the operating fluid reservoir.
3. Insert the O-ring in the groove in the pump base.
4. Fit the screw cap.
5. Tighten the screw cap.
   – Tightening torque: **13 Nm**.
6. Screw the rubber-metal pad into the pump base.

## 7.4 Replacing the electronic drive unit

**NOTICE**

**Damage to the turbopump and electronic drive unit due to improper disconnection of components**

Even after the mains power is switched off, the turbopump continues to deliver electrical energy during its run-down period. If the turbopump and electronic drive unit are disconnected prematurely, there is the risk of body contact and consequently the destruction of electronic components.

► Never disconnect the turbopump and electronic drive unit from each other if power is still connected or if the rotor is running.
► Monitor the turbopump rotation speed via the parameters available in the electronic drive unit (e.g., **[P:398]**).
► Wait until the turbopump comes to a standstill (rotation speed f=0).

**NOTICE**

**Property damage from electrostatic discharge**

Neglecting the electrostatic hazard for electronic components results in their damage or destruction

► Implement ESD safety measures at the workstation.
► Observe EN 61340 "Protection of electronic devices from electrostatic phenomena".

**Backing up settings made by the customer**

The factory operating parameters are always preset in replacement units. All settings made by the customer to the original electronic drive unit are lost when it is replaced. To preserve your custom settings, you have the following options:

1. Back up all your settings as a parameter set in an HPU.
2. Load a backup parameter set by means of HPU into the new electronic drive unit.
3. Program the individual settings into the new electronic drive unit by hand.
4. See the operating instructions of the electronic drive unit and the HPU.

The electronic drive unit of the turbopump cannot be repaired. In the event of a defect, replace the entire electronic drive unit with a replacement part.

**Prerequisites**

- Turbopump is off (see chapter “Switching off”, page 34).
- The vacuum system is vented to atmospheric pressure (see chapter “Venting”, page 34).
- The electrical supply is disconnected.
- All cables are disconnected from the electronic drive unit.
- All openings are sealed with the original protective covers.

**Required tools**

- Torx screwdriver TX 10
- Calibrated torque wrench (tightening factor ≤ 1.6)

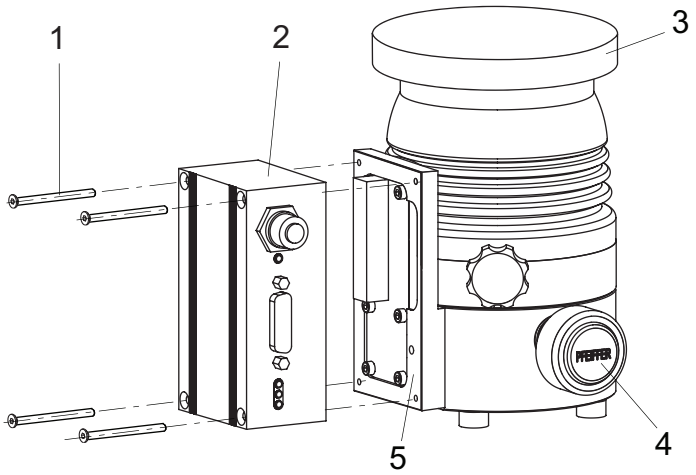


**Fig. 17: Electronic drive unit installation and removal**

1 Torx screw
2 Electronic drive unit
3 High vacuum connection protective cover
4 Fore-vacuum connection protective cover
5 Adapter plate

**Procedure**

1. Install the turbopump upright if required.
2. Unscrew all 4 Torx screws from the electronic drive unit.
3. Pull the old electronic drive unit off the turbopump, taking care to keep it straight.
4. Place a new electronic drive unit straight onto the adapter plate connection of the turbopump.
5. Screw the electronic drive unit to the turbopump with all 4 Torx screws.
   – Tightening torque: **0.6 Nm**

## 7.5 Confirming the rotation speed specification

The typical nominal rotation speed of a turbopump is preset at the factory in the electronic drive unit. If the electronic drive unit is replaced or a different pump type is used, the reference set value of the nominal rotation speed is cleared. The manual confirmation of the nominal rotation speed is part of a redundant safety system as a measure for preventing excess rotation speed.

| HiPace | Nominal rotation speed |
|---|---|
| 10 \| 30 \| 60 \| 80 | 1500 Hz |
| 300 | 1000 Hz |
| 450 | 1100 Hz |
| 400 \| 700 \| 800 | 820 Hz |

**Tbl. 10: Characteristic nominal rotation speeds of the turbopumps**

**Required aids**

- A connected Pfeiffer Vacuum display and control unit.
- Knowledge of the configuration and setting of electronic drive unit operating parameters.

**Adjusting the nominal rotation speed confirmation**

The redundant confirmation of the nominal rotation speed of a turbopump is possible by adjusting the **[P:777] NomSpdConf** parameter in the electronic drive unit.

1. Observe the display and control unit operating instructions.
2. See the electronic drive unit operating instructions.
3. Set the parameter **[P:794]** to "1" and activate the expanded parameter set.
4. Open and edit the parameter **[P:777]**.
5. Set the parameter **[P:777]** to the required value of the nominal rotation speed in Hertz.

**Alternative:** A Pfeiffer Vacuum SpeedConfigurator for the one-time immediate setting of parameter **[P:777]** is included with the replacement units.

# 8 Decommissioning

## 8.1 Shutting down for longer periods

**⚠ WARNING**

**Health hazard through poisoning from toxic contaminated components or devices**

Toxic process media result in contamination of devices or parts of them. During maintenance work, there is a risk to health from contact with these poisonous substances. Illegal disposal of toxic substances causes environmental damage.

- ► Take suitable safety precautions and prevent health hazards or environmental pollution by toxic process media.
- ► Decontaminate affected parts before carrying out maintenance work.
- ► Wear protective equipment.

**Procedure for a longer downtime of the turbopump (> 1 year)**

1. Remove the turbopump from the vacuum system if necessary.
2. Change the operating fluid reservoir of the turbopump if necessary.
3. Close the high vacuum flange of the turbopump.
4. Evacuate the turbopump via the fore-vacuum connection.
5. Vent the turbopump via the venting connection with dry, oil-free air or inert gas.
6. Seal all flange openings with the original protective caps.
7. Store the turbopump upright with the high vacuum flange upwards.
8. Store the turbopump indoors only, within the specified temperature range.
9. In rooms with humid or aggressive atmospheres: Hermetically seal the turbopump together with a drying agent in a plastic bag.

## 8.2 Recommissioning

***NOTICE***

**Risk of damage to the turbopump as a result of operating fluid aging after recommissioning**

The shelf life of the operating fluid of the turbopump is limited. Aging of the operating fluid may lead to the failure of the ball bearing and cause damage to the turbopump.

- ► Pay attention to when the operating fluid must be changed:
  - after maximum 2 years without operation,
  - after maximum 4 years combined operation and downtimes.
- ► Observe the maintenance instructions and inform Pfeiffer Vacuum Service.

**Procedures for recommissioning the turbopump**

1. Check the turbopump for contamination and moisture.
2. Clean the turbopump externally with a lint-free cloth and a little isopropanol.
3. If necessary, arrange for Pfeiffer Vacuum Service to completely clean the turbopump.
4. Observe the total running time of the turbopump and if necessary, arrange for Pfeiffer Vacuum Service to replace the bearing.
5. Change the operating fluid reservoir of the turbopump.
6. Install the turbopump according to these operating instructions (see chapter “Installation”, page 20).
7. Recommission the turbopump according to these instructions .

## 8.3 Disposing of the vacuum pump

**⚠ WARNING**

**Health hazard through poisoning from toxic contaminated components or devices**

Toxic process media result in contamination of devices or parts of them. During maintenance work, there is a risk to health from contact with these poisonous substances. Illegal disposal of toxic substances causes environmental damage.

- ► Take suitable safety precautions and prevent health hazards or environmental pollution by toxic process media.
- ► Decontaminate affected parts before carrying out maintenance work.
- ► Wear protective equipment.

**Procedure**

- ► Dispose safely of all substances according to local regulations.

# 9 Malfunctions

**⚠ WARNING**

**Danger to life from poisoning where toxic process media leak from damaged connections**

Sudden twisting of the turbopump in the event of a fault causes fittings to accelerate. There is the risk of damaging on-site connections (e.g., fore-vacuum line) and resulting leaks. This results in leakage of process media. In processes involving toxic media, there is a risk of injury and danger to life due to poisoning.

- ► Keep masses connected to the turbopump as low as possible.
- ► Use flexible lines to connect to the turbopump where necessary.

**⚠ WARNING**

**Danger to life from the turbopump breaking away in the event of a fault**

Sudden jamming of the rotor generates high destructive torques in accordance with ISO 27892. If the turbopump is **not** properly secured, it can shear off. The energy that this would release could throw the entire turbopump or shattered pieces from its interior through the surrounding space. Potentially dangerous gases can escape. There is a risk of very serious injuries, including death, and extensive property damage.

- ► Follow the installation instructions for this turbopump.
- ► Observe the requirements regarding stability and design of the counter flange.
- ► Use only original accessories or fixing material approved by Pfeiffer Vacuum for the installation.

**⚠ WARNING**

**Risk of injury caused by the turbopump breaking away with the vibration compensator in the event of a malfunction**

Sudden jamming of the rotor generates high destructive torques in accordance with ISO 27892. When using a vibration compensator, this will probably lead to the turbopump being sheared off in use. The energy that this would release could throw the entire turbopump or shattered pieces from its interior through the surrounding space. Potentially dangerous gases can escape. There is a risk of very serious injuries, including death, and extensive property damage.

- ► Take suitable safety precautions on-site for the compensation of the occurring torques.
- ► Before installing a vibration compensator, you must first of all contact Pfeiffer Vacuum.

Should malfunctions occur, you can find information about potential causes and how to fix them here. The operating instructions of the associated electronic drive unit contains more detailed error descriptions.

| Problem | Possible causes | Remedy |
|---|---|---|
| Turbopump will not start up; none of the built-in LEDs on the electronic drive unit light up | • Current supply interrupted | • Check the plug contacts on the power supply pack.<br>• Check the current supply lines.<br>• Check the output voltage at the power supply pack “DC out” connection.<br>— Depending on the version of the power supply pack, 24 V DC or 48 V DC are present. |
| | • Incorrect operating voltage | • Observe the electronic drive unit rating plate.<br>• Supply the correct operating voltage. |
| | • No operating voltage present | • Supply the correct operating voltage.<br>• Switch on the power supply pack. |
| | • Electronic drive unit defective | • Replace the electronic drive unit.<br>• Contact Pfeiffer Vacuum Service. |

| | | |
|---|---|---|
| Turbopump will not start up; green LED on the electronic drive unit is flashing | • **For operation without control unit:** Pins 2-7 and 5-7 on the “X3” connection are not connected | • Connect the connections according to the electronic drive unit connection diagram.<br>• Check the bridges on the connection cable. |
| | • **For operation via RS-485:** The bridge between pins 5 and 7 inhibits control commands | • Remove the bridge from the “X3” connection.<br>• Check the connection cable. |
| | • **For operation via RS-485:** Parameters not set in the electronic drive unit | • Set the parameters **[P: 010]** and **[P: 023]** via the interface RS-485 to 1 = "ON". |
| | • Voltage drop in the cable is too high | • Check the connection cable.<br>• Use a suitable connection cable. |
| Turbopump fails to reach the nominal rotation speed within the set run-up time | • fore-vacuum pressure too high | • Check backup pump compatibility (see technical data).<br>• Check that the backup pump is working. |
| | • Leakage on the turbopump | • Carry out leak detection.<br>• Check seals and flange connections.<br>• Eliminate leaks. |
| | • Gas throughput too high | • Reduce the process gas load. |
| | • Rotor not running smoothly, defective bearing | • Check the turbopump for noise development<br>• Contact Pfeiffer Vacuum Service. |
| | • Run-up time setpoint adjusted too low | • Extend the run-up time setpoint **[P:700]** via a display and control unit. |
| | **Thermal load due to:**<br>• lack of ventilation<br>• water flow too low<br>• fore-vacuum pressure too high<br>• ambient temperature too high | • Reduce the thermal load.<br>— Ensure adequate air supply.<br>— Adjust the cooling water flow.<br>— Reduce the fore-vacuum pressure.<br>— Adapt the ambient conditions. |
| Turbopump not achieving the ultimate pressure | • Turbopump is polluted | • Heat the turbopump if required.<br>• Have it cleaned.<br>• Contact Pfeiffer Vacuum Service. |
| | • Vacuum chamber, pipes or turbopump leaking | • Carry out leak detection starting from the vacuum chamber.<br>• Check seals and flange connections.<br>• Eliminate leaks in the vacuum system. |
| Unusual noises during operation | • Rotor bearing damaged | • Contact Pfeiffer Vacuum Service. |
| | • Rotor damaged | • Contact Pfeiffer Vacuum Service. |
| | • Splinter shield or protective screen loose | • Check and correct the seat of the splinter shield or protective screen in the high vacuum flange.<br>• Follow the installation instructions. |
| Red LED on the electronic drive unit illuminates | • Group error | • Reset the malfunction by switching the current supply off and on.<br>• Reset the malfunction with V+ on pin 6 on the “X3” connection.<br>• Set the parameter **[P: 009]** via the interface RS-485 to 1 = Malfunction acknowledgment.<br>• Set the parameter **[P: 010]** via the interface RS-485 to 0 = off and then 1 = On and Malfunction acknowledgment.<br>• Carry out a differentiated malfunction analysis with a display and control unit.<br>• Contact Pfeiffer Vacuum Service. |

**Tbl. 11: Troubleshooting turbopumps**

# 10 Service solutions from Pfeiffer Vacuum

**We offer first class service**
Long vacuum component service life, coupled with low downtimes, are clear expectations that you have of us. We satisfy your needs with capable products and outstanding service.

We are consistently striving to perfect our core competence, service for vacuum components. And our service is far from over once you've purchased a product from Pfeiffer Vacuum. It often enough really just begins then. In proven Pfeiffer Vacuum quality, of course.

Our professional sales engineers and service technicians stand ready to provide hands-on support to you worldwide. Pfeiffer Vacuum offers a complete portfolio of service offerings, ranging from genuine spare parts right through to service agreements.

**Take advantage of Pfeiffer Vacuum Service**
Whether for preventative on-site service from our field service, fast replacement with as-new replacement products or repair in a Service Center close to you; you have various options for upholding your equipment availability. Detailed information and addresses can be found on our website in the Pfeiffer Vacuum Service section.

**Advice on the optimum solution is available from your Pfeiffer Vacuum contact partner.**
**For quick and smooth handling of the service process, we recommend the following steps:**

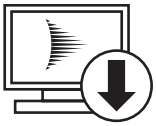

1. Download the current form templates.
   - Declaration of Service Request
   - Service Request
   - Declaration of Contamination

a) Dismantle all accessories and keep them (all external mounted parts as valve, inlet screen, etc.).
b) Drain the operating fluid/lubricant as necessary.
c) Drain the cooling medium as necessary.

2. Fill out the service request and the declaration of contamination.

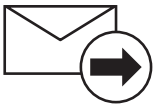

3. Send the forms via email, fax or post to your local Service Center.

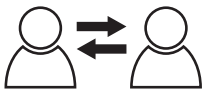

4. You will receive a response from Pfeiffer Vacuum.

**Sending of contaminated products**
No units will be accepted if they are contaminated with micro-biological, explosive or radioactive substances. If products are contaminated or if the declaration of contamination is missing, Pfeiffer Vacuum will contact the customer before starting maintenance. In addition, depending on the product and the level of contamination **additional decontamination costs** may be required.

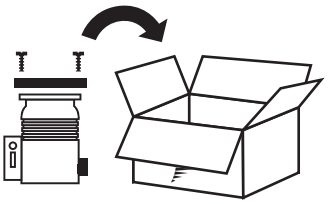

5. Prepare the product for transport in accordance with the details in the declaration of contamination.
a) Neutralize the product with nitrogen or dry air.
b) Close all openings with airtight blank flanges.
c) Seal the product in appropriate protective film.
d) Only pack the product in suitable, stable transport containers.
e) Observe the applicable transport conditions.

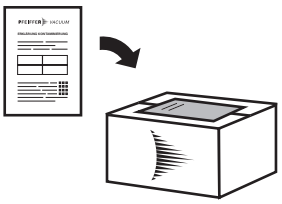

6. Affix the declaration of contamination to the **outside** of the packaging.

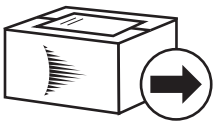

7. Then send your product to your local Service Center.

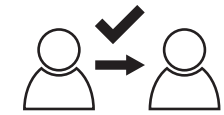

8. You will receive a confirmation message/a quotation from Pfeiffer Vacuum.

For all service orders, our General Terms and Conditions of Sales and Supply and General Terms and Conditions of Repair and Maintenance apply to vacuum equipment and components.

# 11 Spare parts HiPace 80

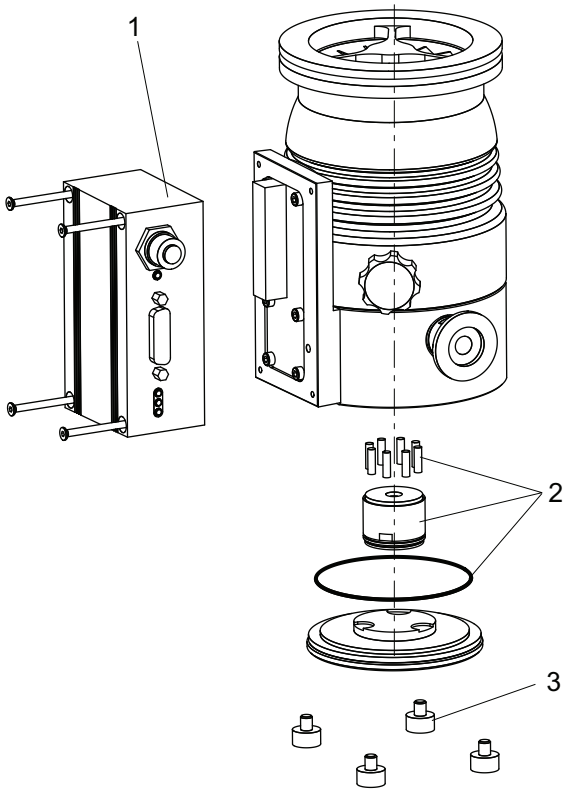


**Fig. 18: Spare parts HiPace 80**

| Position | Designation | Order number | Note | Pieces |
|---|---|---|---|---|
| 1 | Electronic drive unit TC 110 | refer to the rating plate | depending on the connection panel | 1 |
| 2 | Operating fluid reservoir | PM 143 740 -T | incl. capillary rods and O-rings | 1 |
| 3 | Rubber-metal bumper | P 3695 700 ZD | | 4 |

**Tbl. 12: Overview of the spare parts available for the HiPace 80**

# 12 Accessories

View the range of accessories for hybrid bearing turbopumps on our website.

## 12.1 Accessory information

**Fixing materials**
Type-specific assembled packages, with centering ring and seal, ensure the secure fastening of the vacuum pump. Optionally with splinter shield or protective screen.

**Power supply packs and display units**
Power supply packs for optimal voltage supply of Pfeiffer Vacuum products are characterized by their compact size and adapted power supply with maximum reliability. Display and operating units are used to check and adjust operating parameters.

**Cable and adapter**
Mains, interface, connection, and extension cables provide a secure and suitable connection. Different lengths on request.

**Venting accessories**
A Pfeiffer Vacuum venting valve offers maximum operating and process security. Automatic control through the integrated electronic drive unit of the turbopump.

**Sealing gas supply**
Sealing gas is used to protect the vacuum pump from dusty and corrosive processes, or excessive gas throughputs. Sealing gas prevents the ingress of damaging substances into the motor and bearing area. The supply is carried out either via a sealing gas valve or a sealing gas throttle without control.

**Air cooling**
For processes with low gas throughputs and good fore-vacuum pressure, air cooling can be used independently of a water supply. Automatic control through the integrated electronic drive unit of the turbopump.

**Heating**
Heating jackets enable the ultimate pressure to be reached more quickly during process cleaning. Automatic control through the integrated electronic drive unit of the turbopump.

**Backing pump control**
The electronic drive unit of the turbopump enables useful control of backing pumps. Depending on the backing pump used, different operating modes are available.

**Integrated pressure measurement**
Evaluation and control by the integrated electronic drive unit, independently of an additional power supply.

## 12.2 Ordering accessories

| Description | Order number |
|---|---|
| Mounting kit for HiPace 60/80, DN 63 ISO-K, including coated centering ring and claws | PM 016 510 -T |
| Mounting kit for HiPace 60/80, DN 63 ISO-K, including coated centering ring and bracket screws | PM 016 360 -T |
| Mounting kit for HiPace 60/80, DN 40 ISO-KF, including centering ring and clamping ring | PM 016 625 -T |
| Mounting kit for HiPace 60/80, DN 40 ISO-KF, splinter shield, clamping ring | PM 016 626-T |
| Mounting kit for HiPace 60/80, DN 63 ISO-K, including coated centering ring and claws | PM 016 510 -T |
| Hexagon Screw Set for Flanges with Through-Holes, DN 63 CF-F | PM 016 683 -T |
| Set of stud screws for flanges with a threaded hole, DN 63 CF-F | PM 016 684 -T |

| Description | Order number |
|---|---|
| Set of stud screws for flanges with through-hole, DN 63 CF-F | PM 016 733 -T |
| Centering ring with multifunction coating and integrated splinter shield, DN 63 ISO-K/-F | PM 016 207 -U |
| Vibration damper for HiPace 60/80, DN 63 ISO-K | PM 006 800 -X |
| Vibration damper for HiPace 60/80, DN 63 CF-F | PM 006 801 -X |
| Vibration damper for HiPace 60/80, DN 40 ISO-KF | PM 006 799 -X |
| TPS 180, power supply pack for wall/standard rail fitting | PM 061 341 -T |
| TPS 181, power supply pack 19" rack module 3HU | PM 061 345 -T |
| Mains cable 230 V AC, CEE 7/7 to C13, 3 m | P 4564 309 ZA |
| Mains cable 115 V AC, NEMA 5-15 to C13, 3 m | P 4564 309 ZE |
| Mains cable 208 V AC, NEMA 6-15 to C13, 3 m | P 4564 309 ZF |
| Connection cable with RS-485 interface for TC 110/120 to power supply pack | PM 061 350 -T |
| Connection cable with RS-485 interface and 2 accessory ports for TC110/120 to power supply pack | PM 061 351 -T |
| DCU 002, Display Control Unit | PM 061 348 AT |
| DCU 180, Display control unit incl. power supply pack 19” | PM C01 821 |
| Y-Connector M12 to RS-485 | P 4723 010 |
| USB converter to RS-485 interface | PM 061 207 -T |
| Interface cable, M12 m straight/M12 m straight, 3 m | PM 061 283 -T |
| TIC 010, Adapter for two sensors | PT R70 000 |
| TCS 11, adapter for TC 110/120 with RS-485 interface | PM 061 636 -U |
| TCS 12, adapter for TC 110/120 with interface RS-485, 4 accessory ports and coupling set | PM 061 638 -U |
| TCS 13, adapter for TC 110/120 with interface RS-485, 2 accessory ports and coupling set | PM 061 856 -U |
| Air cooling for HiPace 60 P, HiPace 80 and SplitFlow 50/80 with TC 110/120 | PM Z01 300 |
| Water cooling for HiPace 60 P \| HiPace 80 and for SplitFlow 50/80 with push-in fitting, 8 mm | PM 016 623 -T |
| Extension cable M8 on M8 | PM 061 783 -T |
| Venting valve, shielded, 24 V DC, G 1/8", for connection to TC 110/120 | PM Z01 290 |
| Sealing gas valve, shielded for HiPace 30/60/80 with TC 110 | PM Z01 310 |
| Heating jacket for HiPace 80 with TC 110, 230 V AC, safety plug | PM 061 360 -T |
| Heating jacket for HiPace 80 with TC 110, 208 V AC, UL plug | PM 061 361 -T |
| Heating jacket for HiPace 80 with TC 110, 115 V AC, UL plug | PM 061 362 -T |
| Relay box for backing pumps, 1-phase 20 A for TC 110/120 and TCP 350, plug M8 | PM 061 373 -T |
| Relay box, shielded, for backing pumps, 1-phase 7A for TC 110/120 and TCP 350, plug M8 | PM 071 282 -X |
| RPT 010, Digital Piezo/Pirani Sensor | PT R71 100 |
| IKT 010, Digital cold cathode sensor, low current | PT R72 100 |
| IKT 011, Digital cold cathode sensor, high current | PT R73 100 |

**Tbl. 13: Accessories**

# 13 Technical data and dimensions

## 13.1 General

This section describes the basis for the technical data of Pfeiffer Vacuum turbopumps.

**Technical data**
Maximum values refer exclusively to the input as a single load.

- Specifications according to PNEUROP committee PN5
- ISO 27892 2010:"Vacuum technology - Turbomolecular pumps - Measurement of rapid shutdown torque"
- ISO 21360 2012: “Vacuum technology - Standard methods for measuring vacuum-pump performance - Part 1: General description”
- ISO 21360 2018: "Vacuum technology - Standard methods for measuring vacuum-pump performance - Part 4: Turbomolecular vacuum pumps"
- Ultimate pressure with test dome after 48 h bake out duration
- Gas throughput with water cooling; backing pump = rotary vane pump (10 $m^3/h$)
- Cooling water consumption at maximum gas throughput, cooling water temperature 25 °C
- Integral leakage rate with 100 % helium concentration, 10 s measurement duration
- Sound pressure level at distance to vacuum pump = 1 m

| | mbar | bar | Pa | hPa | kPa | Torr \| mm Hg |
|---|---|---|---|---|---|---|
| mbar | 1 | $1 \cdot 10^{-3}$ | 100 | 1 | 0.1 | 0.75 |
| bar | 1000 | 1 | $1 \cdot 10^{5}$ | 1000 | 100 | 750 |
| Pa | 0.01 | $1 \cdot 10^{-5}$ | 1 | 0.01 | $1 \cdot 10^{-3}$ | $7.5 \cdot 10^{-3}$ |
| hPa | 1 | $1 \cdot 10^{-3}$ | 100 | 1 | 0.1 | 0.75 |
| kPa | 10 | 0.01 | 1000 | 10 | 1 | 7.5 |
| Torr \| mm Hg | 1.33 | $1.33 \cdot 10^{-3}$ | 133.32 | 1.33 | 0.133 | 1 |
| 1 Pa = 1 $N/m^2$ | | | | | | |

**Tbl. 14: Conversion table: Pressure units**

| | mbar l/s | Pa $m^3/s$ | sccm | Torr l/s | atm $cm^3/s$ |
|---|---|---|---|---|---|
| mbar l/s | 1 | 0.1 | 59.2 | 0.75 | 0.987 |
| Pa $m^3/s$ | 10 | 1 | 592 | 7.5 | 9.87 |
| sccm | $1.69 \cdot 10^{-2}$ | $1.69 \cdot 10^{-3}$ | 1 | $1.27 \cdot 10^{-2}$ | $1.67 \cdot 10^{-2}$ |
| Torr l/s | 1.33 | 0.133 | 78.9 | 1 | 1.32 |
| atm $cm^3/s$ | 1.01 | 0.101 | 59.8 | 0.76 | 1 |

**Tbl. 15: Conversion table: Units for gas throughput**

## 13.2 Technical data

| Classification advanced | HiPace® 80 with TC 110 | HiPace® 80 with TC 110 | HiPace® 80 with TC 110 |
|---|---|---|---|
| Order number | PM P03 940 | PM P03 941 | PM P03 942 |
| Flange (in) | DN 63 ISO-K | DN 63 CF-F | DN 40 ISO-KF |
| Flange (out) | DN 16 ISO-KF/ G ¼" | DN 16 ISO-KF/ G ¼" | DN 16 ISO-KF/ G ¼" |
| Ultimate pressure according to PNEUROP | $< 1 \cdot 10^{-7}$ hPa | $< 5 \cdot 10^{-10}$ hPa | $< 1 \cdot 10^{-7}$ hPa |
| Compression ratio for Ar | $> 1 \cdot 10^{11}$ | $> 1 \cdot 10^{11}$ | $> 1 \cdot 10^{11}$ |
| Compression ratio for $H_2$ | $1.4 \cdot 10^{5}$ | $1.4 \cdot 10^{5}$ | $1.4 \cdot 10^{5}$ |

| Classification advanced | HiPace® 80 with TC 110 | HiPace® 80 with TC 110 | HiPace® 80 with TC 110 |
|---|---|---|---|
| Compression ratio for He | $1.3 \cdot 10^7$ | $1.3 \cdot 10^7$ | $1.3 \cdot 10^7$ |
| Compression ratio for $N_2$ | $> 1 \cdot 10^{11}$ | $> 1 \cdot 10^{11}$ | $> 1 \cdot 10^{11}$ |
| Pumping speed for Ar | 66 l/s | 66 l/s | 30 l/s |
| Pumping speed for $H_2$ | 48 l/s | 48 l/s | 38 l/s |
| Pumping speed for He | 58 l/s | 58 l/s | 41 l/s |
| Pumping speed for $N_2$ | 67 l/s | 67 l/s | 35 l/s |
| Gas throughput at full rotational speed for Ar | 0.54 hPa·l/s | 0.54 hPa·l/s | 0.54 hPa·l/s |
| Gas throughput at full rotational speed for $H_2$ | 15.3 hPa·l/s | 15.3 hPa·l/s | 15.3 hPa·l/s |
| Gas throughput at full rotational speed for He | 2.7 hPa·l/s | 2.7 hPa·l/s | 2.7 hPa·l/s |
| Gas throughput at full rotational speed for $N_2$ | 1.3 hPa·l/s | 1.3 hPa·l/s | 1.3 hPa·l/s |
| Fore-vacuum max. for $N_2$ | 22 hPa | 22 hPa | 22 hPa |
| Fore-vacuum max. for Ar | 23 hPa | 23 hPa | 23 hPa |
| Fore-vacuum max. for $H_2$ | 14 hPa | 14 hPa | 14 hPa |
| Fore-vacuum max. for He | 22 hPa | 22 hPa | 22 hPa |
| Rotation speed ± 2 % | 90000 rpm | 90000 rpm | 90000 rpm |
| Rotation speed variable | 50 – 100 % | 50 – 100 % | 50 – 100 % |
| Power characteristic line in gas mode 0, vertex C | 56/90000 W/min$^{-1}$ | 56/90000 W/min$^{-1}$ | 56/90000 W/min$^{-1}$ |
| Power characteristic line in gas mode 0, vertex D | 65/81000 W/min$^{-1}$ | 65/81000 W/min$^{-1}$ | 65/81000 W/min$^{-1}$ |
| Power characteristic line in gas mode 1, vertex A | 80/90000 W/min$^{-1}$ | 80/90000 W/min$^{-1}$ | 80/90000 W/min$^{-1}$ |
| Power characteristic line in gas mode 1, vertex B | 80/84000 W/min$^{-1}$ | 80/84000 W/min$^{-1}$ | 80/84000 W/min$^{-1}$ |
| Power characteristic line in gas mode 2, vertex E | 110/90000 W/min$^{-1}$ | 110/90000 W/min$^{-1}$ | 110/90000 W/min$^{-1}$ |
| Power characteristic line in gas mode 2, vertex F | 110/84000 W/min$^{-1}$ | 110/84000 W/min$^{-1}$ | 110/84000 W/min$^{-1}$ |
| Operating voltage: DC | 24 V | 24 V | 24 V |
| Power consumption max. | 110 W | 110 W | 110 W |
| Input voltage: tolerance | ±5 % | ±5 % | ±5 % |
| Current max. | 4,6 A | 4,6 A | 4,6 A |
| Run-up time | 1.7 min | 1.7 min | 1.7 min |
| Electronic drive unit | with TC 110 | with TC 110 | with TC 110 |
| I/O interfaces | RS-485, Remote | RS-485, Remote | RS-485, Remote |
| Mounting orientation | Any | Any | Any |
| Bearing | Hybrid | Hybrid | Hybrid |
| Cooling method, standard | Convection | Convection | Convection |
| Cooling water flow | 75 l/h | 75 l/h | 75 l/h |
| Cooling water temperature | 5 – 25 °C | 5 – 25 °C | 5 – 25 °C |
| Cooling method, optional | Air/Water | Air/Water | Air/Water |
| Sound pressure level | ≤ 48 dB(A) | ≤ 48 dB(A) | ≤ 48 dB(A) |
| Venting connection | G 1/8" | G 1/8" | G 1/8" |
| Connection pressure (abs.) for venting/sealing gas valve | 1500 hPa | 1500 hPa | 1500 hPa |
| Integral leak rate | $< 1 \cdot 10^{-8}$ Pa m³/s | $< 1 \cdot 10^{-8}$ Pa m³/s | $< 1 \cdot 10^{-8}$ Pa m³/s |
| Relative humidity of air | 5 – 85 %, not condensing | 5 – 85 %, not condensing | 5 – 85 %, not condensing |

| Classification advanced | HiPace® 80 with TC 110 | HiPace® 80 with TC 110 | HiPace® 80 with TC 110 |
|---|---|---|---|
| Protection category | IP54 | IP54 | IP54 |
| Permissible magnetic field max. | 3.8 mT | 3.8 mT | 3.8 mT |
| Permissible irradiated thermal power max. | 0.9 W | 0.9 W | 0.9 W |
| Transport and storage temperature | -25 – 55 °C | -25 – 55 °C | -25 – 55 °C |
| Weight | 2.4 kg | 3.8 kg | 2.4 kg |

**Tbl. 16: Technical data for HiPace 80 | 24 V**

## 13.3 Dimensions

Dimensions in mm

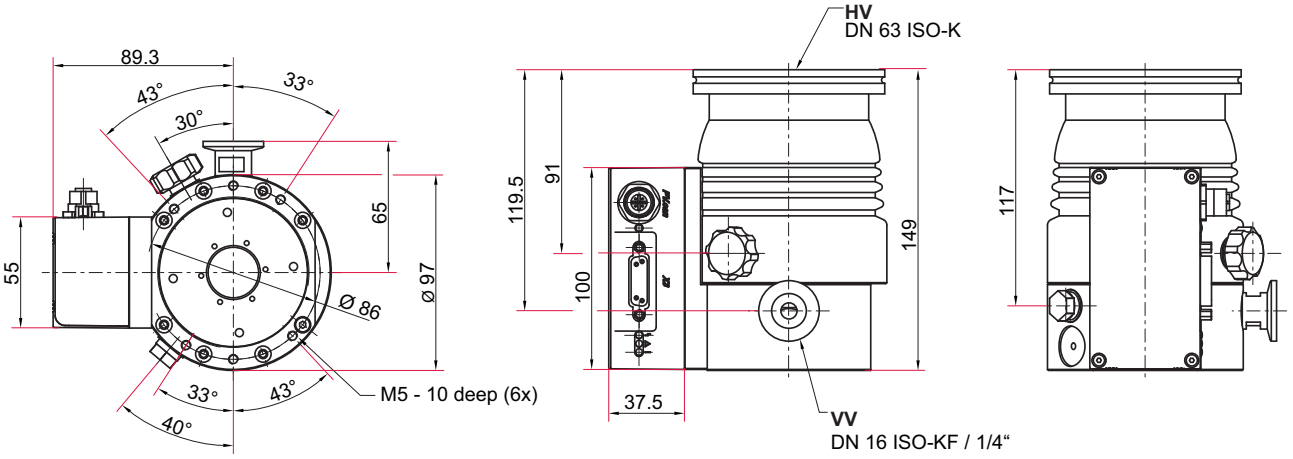


**Fig. 19: Dimensions HiPace 80 | DN 63 ISO-K**

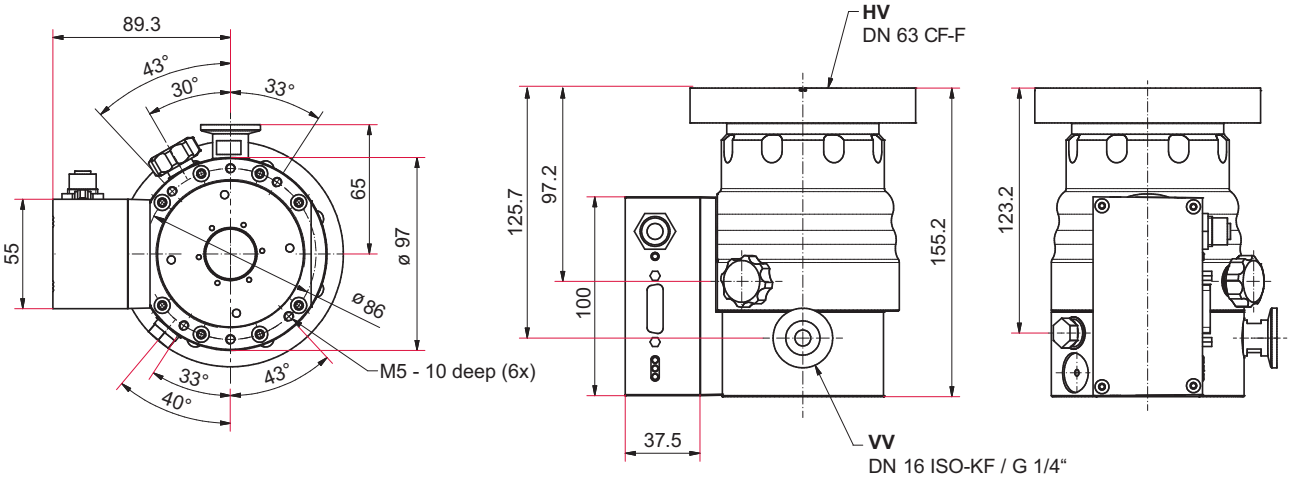


**Fig. 20: Dimensions HiPace 80 | DN 63 CF-F**

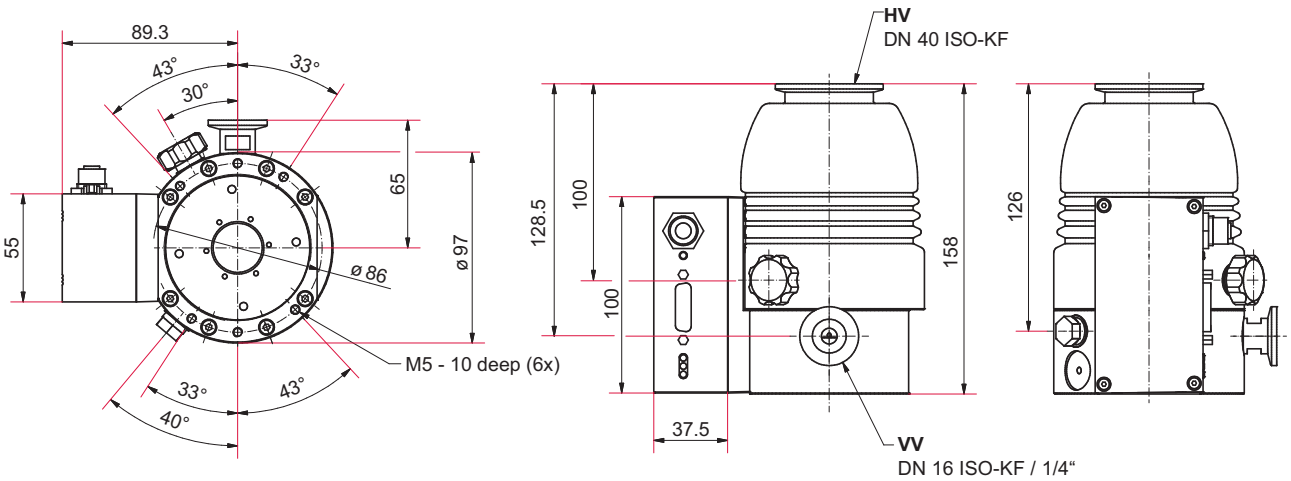


**Fig. 21: Dimensions HiPace 80 | DN 40 ISO-KF**

# Declaration of conformity

We hereby declare that the below product satisfies all relevant provisions of the following **European Directives**:

- **Machinery 2006/42/EC (Annex II, no. 1 A)**
- **Electromagnetic compatibility 2014/30/EU**
- **Restriction of the use of certain hazardous substances 2011/65/EU**

The authorized representative for the compilation of technical documents is Mr. Helmut Bernhardt, Pfeiffer Vacuum GmbH, Berliner Straße 43, 35614 Asslar, Germany.

**Turbopump**
**HiPace 80**

**Harmonized standards and applied national standards and specifications:**

DIN EN ISO 12100: 2011
DIN EN 1012-2: 2011
DIN EN 61000-3-2: 2015
DIN EN 61000-3-3: 2014
DIN EN 61010-1: 2011
DIN EN 61326-1: 2013
DIN EN 62061: 2013
ISO 21360-1: 2016
ISO 21360-4: 2018
DIN EN IEC 63000: 2019

Signature:

Pfeiffer Vacuum GmbH
Berliner Straße 43
35614 Asslar
Germany

(Dr. Ulrich von Hülsen)
Managing Director

Asslar, 6/3/2019

CE

PFEIFFER VACUUM

## VACUUM SOLUTIONS FROM A SINGLE SOURCE

**Pfeiffer Vacuum stands for innovative and custom vacuum solutions worldwide, technological perfection, competent advice and reliable service.**

## COMPLETE RANGE OF PRODUCTS

**From a single component to complex systems:**
**We are the only supplier of vacuum technology that provides a complete product portfolio.**

## COMPETENCE IN THEORY AND PRACTICE

**Benefit from our know-how and our portfolio of training opportunities!**
**We support you with your plant layout and provide first-class on-site service worldwide.**

ed. L - Date 1907 - P/N:PT0208BEN

**Are you looking for a perfect vacuum solution? Please contact us**

**Pfeiffer Vacuum GmbH**
Headquarters • Germany
T +49 6441 802-0
info@pfeiffer-vacuum.de

**www.pfeiffer-vacuum.com**

PFEIFFER VACUUM