OPERATING INSTRUCTIONS

EN

Translation of the original instructions

HIPACE 800 M

Turbopump

PFEIFFER VACUUM

PT 0357 BEN/C (1603)

Table of contents

1 About this manual . . . 4
1.1 Validity . . . 4
1.1.1 Applicable documents . . . 4
1.2 Conventions . . . 4
1.2.1 Safety instructions . . . 4
1.2.2 Pictographs . . . 5
1.2.3 Instructions in the text . . . 5
1.2.4 Abbreviations . . . 5
1.2.5 Symbols used . . . 5
2 Safety . . . 6
2.1 Safety precautions . . . 6
2.2 Protective equipment . . . 7
2.3 Proper use . . . 7
2.4 Improper use . . . 8
3 Transport and storage . . . 9
3.1 Transport . . . 9
3.2 Storage . . . 9
4 Product description . . . 10
4.1 Product identification . . . 10
4.1.1 Pump types . . . 10
4.1.2 Pump features . . . 10
4.1.3 Scope of delivery . . . 10
4.2 Function . . . 11
4.2.1 Cooling . . . 11
4.2.2 Rotor bearing . . . 11
4.2.3 Drive . . . 11
4.3 Range of application . . . 12
5 Installation . . . 13
5.1 Preparatory work . . . 13
5.2 Set-up . . . 13
5.2.1 Earthquake safety . . . 13
5.2.2 Use of a splinter shield or protection screen . . . 14
5.2.3 Vibration damper . . . 14
5.3 Mounting orientation . . . 15
5.4 Installing the high vacuum flange . . . 16
5.4.1 Installation of ISO-K flange with ISO-K flange . . . 16
5.4.2 Installation of ISO-K flange with ISO-F flange . . . 17
5.4.3 Installation of ISO-F with ISO-F flange . . . 18
5.4.4 Installation of CF- flanges . . . 19
5.5 Connecting the fore-vacuum side . . . 20
5.6 Connections to the turbopump . . . 21
5.6.1 Electronic drive unit . . . 21
5.6.2 Earthing . . . 21
5.6.3 Power and electrical supply . . . 21
5.7 Accessory connection . . . 22
5.7.1 Venting valve . . . 23
5.7.2 Air cooling . . . 23
5.7.3 Sealing gas connection . . . 24
5.7.4 Heating jacket . . . 24
5.7.5 Water cooling . . . 26
6 Operation . . . 27

6.1 Commissioning . . . 27
6.1.1 Magnetic bearing calibration . . . 27
6.2 Operation modes . . . 28
6.3 Function description . . . 28
6.3.1 Operation via "remote" connection . . . 28
6.3.2 Operation with DCU or HPU . . . 28
6.3.3 Operation via fieldbus . . . 28
6.4 Monitoring of the operation conditions . . . 28
6.4.1 Temperature monitoring . . . 28
6.4.2 Operation display via LED . . . 29
6.4.3 Safety bearing stress . . . 29
6.4.4 Balance . . . 29
6.5 Switching off and venting . . . 29
6.5.1 Switching off . . . 29
6.5.2 Electrical brake . . . 29
6.5.3 Emergency power supply . . . 30
6.5.4 Venting . . . 30
7 Maintenance / replacement . . . 31
7.1 Maintenance intervals and responsibilities . . . 31
7.2 Replacing the electronic drive unit . . . 31
7.2.1 Magnetic bearing calibration . . . 32
7.2.2 Rotation speed set value . . . 32
8 Decommissioning . . . 33
8.1 Shutting down for longer periods . . . 33
8.2 Re-starting . . . 33
8.3 Disposal . . . 33
9 Malfunctions . . . 34
9.1 Rectifying malfunctions . . . 34
10 Service . . . 35
11 Spare parts HiPace 800 M . . . 36
12 Accessories . . . 37
13 Technical data and dimensions . . . 39
13.1 General . . . 39
13.2 Technical data . . . 39
13.3 Dimensions . . . 41
Declaration of conformity . . . 42

1 About this manual

1.1 Validity

This operating manual is for customers of Pfeiffer Vacuum. It describes the functioning of the designated product and provides the most important information for safe use of the unit. The description follows applicable EU guidelines. All information provided in this operating manual refers to the current state of the product's development. The documentation remains valid as long as the customer does not make any changes to the product.

Up-to-date operating instructions can also be downloaded from www.pfeiffer-vacuum.com.

1.1.1 Applicable documents

HiPace 800 M, depending on the model	Operating instructions
Operating instructions "Electronic drive unit TM 700", standard	PT 0329 BN*
Operating instructions "Electronic drive unit TM 700 PB", Profibus	PT 0354 BN*
Operating instructions "Electronic drive unit TM 700 E74", acc. Semi E74	PT 0355 BN*
Operating instructions "Electronic drive unit TM 700 DN", DeviceNet	PT 0356 BN*
Operating instructions "Electronic drive unit TM 700 EC", EtherCAT	PT 0503 BN*
Declaration of conformity	Part of this document

*also available via www.pfeiffer-vacuum.com

1.2 Conventions

1.2.1 Safety instructions

The safety instructions in Pfeiffer Vacuum operating instructions are the result of risk evaluations and hazard analyses and are oriented on international certification standards as specified by UL, CSA, ANSI Z-535, SEMI S1, ISO 3864 and DIN 4844. In this document, the following hazard levels and information are considered:

DANGER

Imminent danger
Indicates an imminent hazardous situation that will result in death or serious injury.

WARNING

Possibly imminent danger
Indicates an imminent hazardous situation that can result in death or serious injury.

CAUTION

Possibly imminent danger
Indicates an imminent hazardous situation that can result in minor or moderate injury.

NOTICE

Command or note
Command to perform an action or information about properties, the disregarding of which may result in damage to the product.

1.2.2 Pictographs

Prohibition of an action to avoid any risk of accidents, the disregarding of which may result in serious accidents

Warning of a displayed source of danger in connection with operation of the unit or equipment

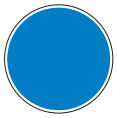

Command to perform an action or task associated with a source of danger, the disregarding of which may result in serious accidents

Important information about the product or this document

1.2.3 Instructions in the text

➔ Work instruction: here you have to do something.

1.2.4 Abbreviations

DCU:	Display Control Unit
HPU:	Handheld Programming Unit
TM:	Electronic drive unit and magnetic bearing controller for turbopump
TPS:	Mains pack

1.2.5 Symbols used

The following symbols are used consistently throughout the diagrams:

- Ⓗ High vacuum flange
- Ⓥ Fore-vacuum flange
- Ⓥ Vacuum flange of the backing pump
- Exhaust flange of the backing pump
- Electrical connection
- SG Sealing gas connection
- Ⓕ Venting connection
- Cooling water connection

2 Safety

2.1 Safety precautions

Duty to inform

Each person involved in the installation, operation or maintenance of the vacuum pump must read and observe the safety-related parts of these operating instructions.

➔ The operator is obligated to make operating personnel aware of dangers originating from the vacuum pump, the pumped medium and the entire system.

Installation and operation of accessories

Pfeiffer Vacuum pumps can be equipped with a series of adapted accessories. The installation, operation and maintenance of connected devices are described in detail in the operating instructions of the individual components.

➔ For information on order numbers of components, see "Accessories".

➔ Use original accessory parts only.

NOTICE

Checking the safety system against excess rotation speed

To provide the functioning of the integrated safety system for avoiding excess rotation speed, the pump must run-up from the standstill at least once a year.

➔ Switch off the pump and await the complete standstill (rotation speed = 0 Hz).

➔ Run-up the pump according to this operating instructions.

WARNING

Danger of unsafe electrical installation

Safe operation after installation is the responsibility of the operator.

➔ Do not independently modify or change the pump and electrical equipment.

➔ Make sure that the system is integrated in an emergency off safety circuit.

➔ Consult Pfeiffer Vacuum for special requirements.

WARNING

Danger due to lack of power disconnection device

Pump and electronic drive unit are not equipped with a power disconnection device. Installation of a user-supplied power disconnection device in accordance with SEMI-S2.

➔ Fit a circuit breaker with an interruption rating of min. 10,000 A.

WARNING

Danger of electric shock

In case of defect, the parts connected to the mains supply are under voltage.

➔ Always keep the mains connection freely accessible so you can disconnect it at any time.

- Do not expose any body parts to the vacuum.
- Observe all safety and accident prevention regulations.
- Regularly check the proper observance of all safety measures.
- **Power supply:** The turbopump power supply must apply to the requirements of double insulation between mains input voltage and operating voltage according to the regulations of IEC 61010 and IEC 60950. Therefore Pfeiffer Vacuum recommends to use exclusively original-power packs and -accessories. Only in this case Pfeiffer Vacuum is able to guarantee the compliance of the European and North American guidelines.
- A safe connection to the protective earthing conductor (PE) is recommended (protection class III).

- Do not loosen any plug connection during operations.
- Wait for the rotor to reach standstill before peforming work on the high vacuum flange.
- Keep leads and cables well away from hot surfaces (> 70 °C).
- Never fill or operate turbopump with cleaning agent.
- Do not operate the turbopump with open high vacuum flange.
- Do not carry out any unauthorized modifications or conversions to the pump.
- When returning the turbopump observe the shipping instructions.

2.2 Protective equipment

Determined situations concerning the handling of vacuum pumps require wearing of personal protective equipment. The owner, respectively the employer are obligated to provide an adequate equipment to any operating persons.

DANGER

Danger to health by hazardous substances during maintenance or installation

Depending on the process vacuum pumps, components or operating fluids can be contaminated by toxic, reactive or radioactive substances.

➔ Wear adequate protective equipment during maintenance and repairs or in case of reinstallation.

WARNING

Risk of injury through falling objects

When transporting vacuum pumps by hand, there is a danger through loads slipping and falling down.

➔ Carry small and mid-size vacuum pumps two-handed.
➔ Carry vacuum pumps > 20 kg by a suitable lifting device.
➔ Wear safety shoes with steel toe cap according to directive EN 347.

CAUTION

Risk of injury through hot surfaces

Vacuum pumps can become hot during operation.

➔ Allow the pump to cool before maintenance and repairs.
➔ If necessary wear protective gloves according to EN 420.

CAUTION

Risk of injury through sharp edges

Rotor and stator disks of turbopumps have very sharp edges.

➔ Before any working wait for the complete standstill of the pump.
➔ Do not reach in the high vacuum flange.
➔ If necessary wear protective gloves according to EN 420.

2.3 Proper use

NOTICE

EC conformity

The manufacturer's declaration of conformity becomes invalid if the operator modifies the original product or installs additional components.

➔ Following installation into a plant and before commissioning, the operator must check the entire system for compliance with the valid EU directives and reassess it accordingly.

- The vacuum pump may only be used to generate a vacuum.
- Only operate the turbopump with an approved backing pump.

2.4 Improper use

Improper use will cause all claims for liability and warranties to be forfeited. Improper use is defined as usage for purposes deviating from those mentioned above, especially:

- installation of the pump with unspecified mounting material
- pumping of corrosive or explosive media
- pumping of condensing vapors
- pumping of liquids
- pumping of dusts
- operation with improper high gas throughput
- operation with improper high fore-vacuum pressures
- operation with improper gas mode
- operation with improper high levels of insulated heat input
- operation in improper high magnetic fields
- venting with improper high venting rates
- use of the vacuum pump to generate pressure
- operation of the devices in areas with ionizing radiation
- operation in potentially explosive areas
- use of the devices in systems in which impact-like stress and vibrations or periodic forces affect the devices
- use of accessories or spare parts, which are not named in this manual

warranty seal
PFEIFFER VACUUM

Closure seal

The product is sealed at the factory. Damaging or removal of a closure seal leads to the loss of liability and warranty entitlements.

➔ Do not open the product within its warranty period!

➔ For process-related shorter maintenance intervals please contact the Pfeiffer Vacuum Service.

3 Transport and storage

3.1 Transport

➔ Reuse the transport container of the vacuum pump.
  – Transport or ship vacuum pumps in the original packing preferably.

➔ Only remove the protective covers from the high vacuum and the fore-vacuum side immediately before connection.

➔ Keep the original protective covers.

➔ Always transport the turbopump in its upright position.

3.2 Storage

➔ Close the flange openings by using the original protective covers.

➔ Close further connection ports by using the corresponding protective covers.

➔ Store the pump only indoors at temperatures between -25 °C and +55 °C.

➔ In rooms with moist or aggressive atmospheres, the pump must be airproof shrink-wrapped in a plastic bag together with a bag of desiccant.

4 Product description

4.1 Product identification

4.1.1 Pump types

The product designation consists of a family designation (1), the size (2), which is oriented on the pumping speed, and if applicable the additional properties (3) of the pump.

HiPace(1) 800(2)M(3)

1. Family designation	2. Model designation	3. Property designation
HiPace	**800** = Model designation of the pump related to its pumping speed class	**none** = Standard version **U** = Upside-down installation orientation **C** = Corrosive gas version **P** = Process **M** = Active magnetic bearing **T** = Temperature management system **E** = High Efficiency **H** = High Compression **I** = Ion implantation

4.1.2 Pump features

Characteristics	HiPace 800 M		
HV flange	DN 200 ISO-K	DN 200 ISO-F	DN 200 CF-F
Flange material	Aluminium	Aluminium	Stainless steel

To correctly identify the product when communicating with Pfeiffer Vacuum, always have the information from the rating plate available.

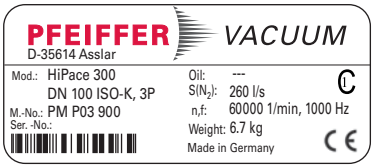

Fig. 1: Example for a rating plate

4.1.3 Scope of delivery

- HiPace 800 M with TM 700 and 48 V DC ± 5 %
- Venting valve PM Z01 291
- Protective cover for the high vacuum flange and the fore-vacuum flange
- Operating instructions

4.2 Function

The turbopump HiPace 800 M forms a complete unit together with the electronic drive and magnetic bearing unit TM 700 (in the following just: "electronic drive unit"). For the voltage supply only Pfeiffer Vacuum power supplies may be used (e.g.TPS, OPS or DCU).

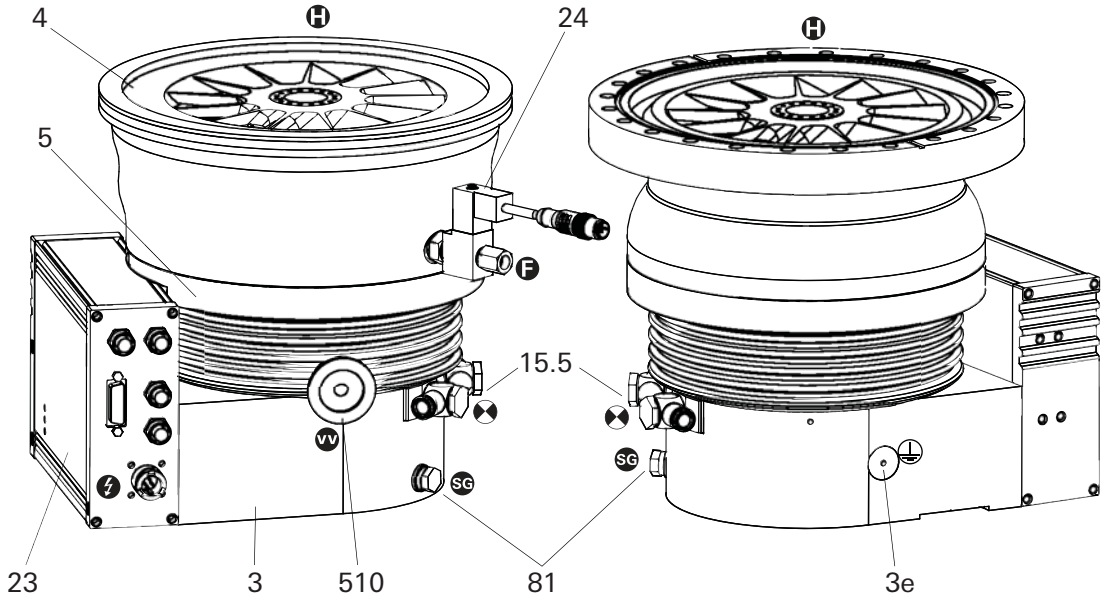

Fig. 2: View of HiPace 800 M with TM 700

3	Pump lower part	5	Intermediate piece	24	Venting valve
3e	Earthing connection	15.5	Cooling water connection	81	Sealing gas connection
4	Pump casing	23	Electronic drive unit TM 700	510	Fore-vacuum connection

4.2.1 Cooling

- Water cooling
- Air cooling (optional)

In the case of excess temperature the electronic drive unit reduces the drive power automatically. Depending on the application and the HiPace different cooling variants are selectable.

4.2.2 Rotor bearing

Active-magnetic bearing turbopump

- High vacuum side: electromagnetic radial bearings
- Fore-vacuum side: electromagnetic radial and axial bearings

Active magnetic bearings offer largely wear-free operation and permit lubricant-free vacuum processes. Dry-running safety bearings are installed to avoid contact between the rotor and stator.

4.2.3 Drive

Electronic drive unit TM 700

4.3 Range of application

The pump HiPace 800 M must be installed and operated under the following ambient conditions:

Installation location	weather protected (indoors)
Protection category	IP 54
Protection class	III
Ambient temperature	+5 °C to +35 °C with air cooling +5 °C to +40 °C with water cooling
Relative humidity	max. 50% at T ≤ 40 °C, up to max. 80 %, at T ≤ 31 °C
Atmospheric pressure	75 kPa - 106 kPa
Installation altitude	2000 m max.
Degree of pollution	2
Permissible surr. magnetic field	≤5.5 mT
Overvoltage category	II
Connection voltage electronic drive unit (depending on the variant)	48 V DC ±5%

Remarks to ambient conditions

The specified permissible ambient temperatures apply to operation of the turbopump at maximum permissible fore-vacuum pressure or at maximum gas throughput depending on the cooling method. The turbopump is intrinsically safe by a redundant temperature monitoring.

- By reducing the fore-vacuum pressure or gas throughput, the turbopump can be operated at higher ambient temperatures.
- If the maximum permissible operating temperature of the turbopump is exceeded, the electronic drive unit reduces drive power first and switches off then, if necessary.

5 Installation

WARNING

Danger from the turbopump being ripped off

If the rotor is suddenly blocked, torques of up to 6500 Nm could occur, which could cause the turbopump to be ripped off if it is not properly affixed. The energy that this would release could throw the entire pump or pieces from its interior through the room. That would cause severe, possibly fatal, injuries as well as serious property damage.

➔ Carefully follow the installation instructions in this handbook.

➔ Only use approved original parts from Pfeiffer Vacuum (Accessories) for the installation.

Installation and operation of accessories

Pfeiffer Vacuum pumps can be equipped with a series of adapted accessories. The installation, operation and maintenance of connected devices are described in detail in the operating instructions of the individual components.

➔ For information on order numbers of components, see "Accessories".

➔ Use original accessory parts only.

5.1 Preparatory work

When installing the pump, observe the following conditions:

- the ambient conditions specified for the range of application
- When using a casing heating and a water cooling unit the temperature of the connected flange of the vacuum chamber must not exceed 120 °C.
- It is not allowed to operate the device in systems where impact-like stresses and vibrations or periodically forces occur.

➔ Ensure sufficient cooling for the turbopump.

➔ Where magnetic fields > 5.5 mT are involved, a suitable shielding must be used. Check installation location and consult Pfeiffer Vacuum if needed!

➔ The maximum permissible rotor temperature for the turbopump is 120 °C. If high temperatures arise for process reasons, the radiated heat input must not exceed 4.2 W. Install suitable screening sheets, if necessary (design information on request).

5.2 Set-up

NOTICE

Danger due to external vibrations

External pump vibrations may cause magnet bearing overload and therefore safety bearing stress.

➔ Avoid lateral and tilting pump movements.

➔ Configure the system appropriately to compensate for external vibration, e.g. due to high-vacuum valves.

➔ Secure the vacuum chamber provided by the customer against moving and tilting.

- Ensure the greatest possible cleanliness when installing any high vacuum parts. Unclean components prolong the pump-down time.
- All flange components must be grease-free, dust-free and dry at installation.

5.2.1 Earthquake safety

An earthquake can result in contact with the safety bearings. All forces occuring hereby are safely absorbed by the properly installed flange connections.

➔ Secure the vacuum chamber against shifting and tipping on customers side.

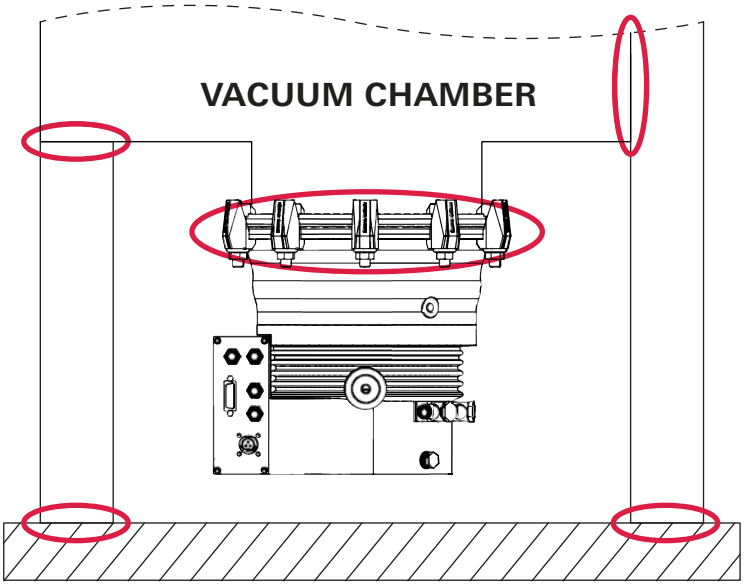

Fig. 3:	Example: How to secure against shifting and tipping by external tremors
⬭	= Safety connection, implementation each by the customer

5.2.2 Use of a splinter shield or protection screen

Pfeiffer Vacuum centering rings with splinter shield or protection screen in the high vacuum flange protect the turbopump against foreign bodies coming from the chamber. Thus, the pumping speed of the pump is reduced.

	Reduced pumping speed in %			
	H_2	He	N_2	Ar
Splinter shield DN 200	3	5	16	18
Protection screen DN 200	1	1	4	5

5.2.3 Vibration damper

WARNING

Danger from the turbopump and vibration damper being torn-off

In case of sudden blocking of the rotor, an applied vibration damper cannot compensate any of the occurring forces. There is a danger of the turbopump being torn-off and thereby resulting severest injuries and property damages. Applicable safeguards must be taken to compensate possible occurring torques.

➔ Definitely consult with Pfeiffer Vacuum.

➔ Do not exceed the max. permissible temperature at the vibration damper (100 °C).

5.3 Mounting orientation

When using dry backing pumps, Pfeiffer Vacuum HiPace pumps are designed for installation in any orientation.

➔ Support pipes in front of the vacuum pump or remove them. No force from the pipe system may be exerted on the fixed pump.

➔ To avoid contamination via the fore-vacuum line when using oil-sealed backing pumps the fore-vacuum flange should always point vertically downward (± 25°).

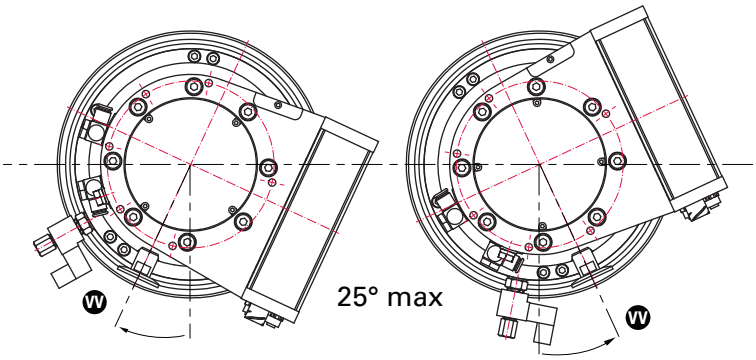

Fig. 4: Recommended orientation of the fore-vacuum flange

The maximum axial loading capacity of the high vacuum flange is 500 N (equals 50 kg). A one-sided load on the high vacuum flange is not permitted.

5.4 Installing the high vacuum flange

If the rotor is suddenly blocked, the torques arising from the system and the high vacuum flange must be absorbed. Only the components listed in the following can be used to fasten the turbopumps to the high vacuum flange. The installation elements for turbopumps are special designs by Pfeiffer Vacuum. In all operating conditions, the tensile strength of the flange material must be at least 170 N/mm^2.

➔ Secure the vacuum chamber against shifting and tipping on customers side.

DANGER

Danger to life - impermissible fastening

Twisting or tearing-off is possible in case the rotor is suddenly blocked due to the fastening of pumps on a vacuum chamber with different flange variants.

➔ Use only the correct mounting kit from Pfeiffer Vacuum.

➔ Pfeiffer Vacuum will not accept any liability for all damages resulting from impermissible fastening.

NOTICE

Observe shape tolerances for the counter flange

Unevennesses of the customer supplied counter flange can lead to warping of the pump casing despite proper fastening. Leakiness and negative running characteristics can be the result.

➔ Do not exceed an evenness of max. 0.05 mm for the whole surface.

Mounting of ISO flanges

If the rotor suddenly blocks the connection of high vacuum flanges of types ISO-KF or ISO-K can lead to twisting despite proper installation.

- The tightness of the high vacuum flange is not at risk thereby.

5.4.1 Installation of ISO-K flange with ISO-K flange

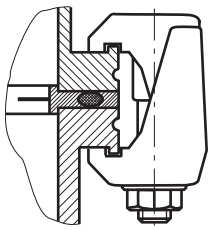

For the installation the following components are exclusively authorized:

- the valid mounting kit of the Pfeiffer Vacuum accessories programme
- mounting materials including protection screen or splinter shield are optionally available

➔ Mind that the sealing surfaces are not damaged.

1) Connect the flanges according to the drawing and with the component parts of the mounting kit.
2) Use the required number of **10** claw clamps.
3) Tighten the claw clamps crosswise in three steps.
4) Tightening torque: 5, 15, 25 ±2 Nm

5.4.2 Installation of ISO-K flange with ISO-F flange

The connection types for installation of ISO-K to ISO-F flange are "hex screw and threaded hole," "stud screw and threaded hole," and "stud screw and through hole".

For the installation the following components are exclusively authorized:

- the valid mounting kit of the Pfeiffer Vacuum accessories programme
- mounting materials including protection screen or splinter shield are optionally available

Hexagon screw and threaded hole

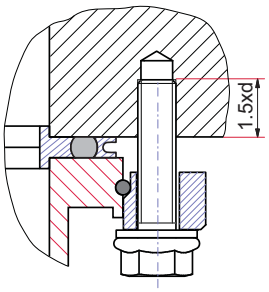

➔ Mind that the sealing surfaces are not damaged.

1) Put the collar flange over the high vacuum flange of the turbopump.
2) Insert the retaining ring into the groove of the high vacuum flange.
3) Fasten the turbo pump with collar flange and centering ring to the counter flange as shown in the graphic.
4) Use the required number of **12** hex screws with washer.
5) Screw hex screws 1.5 x d into the threaded holes.
   – The tensile strength of the flange material must be at least 270 N/mm^2 in all operating conditions.
6) Tighten the hex screws crosswise in three steps.
7) Tightening torque DN 200: 5, 10, 16 ± 1 Nm

Stud screw and threaded hole

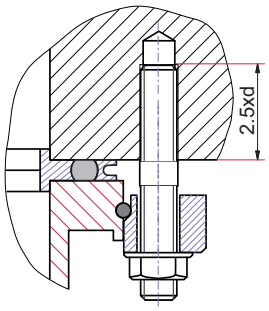

➔ Mind that the sealing surfaces are not damaged.

1) Use the required number of **12** stud screws and nuts.
2) Screw in the stud screws with the shorter threaded end 2.5 x d in the bore holes on the counter flange.
3) Put the collar flange over the high vacuum flange of the turbopump.
4) Insert the retaining ring into the groove of the high vacuum flange.
5) Fasten the turbo pump with collar flange and centering ring to the counter flange as shown in the graphic.
6) Tighten the nuts crosswise in three steps.
7) Tightening torque DN 200: 5, 10, 16 ± 1 Nm

Stud screw and through hole

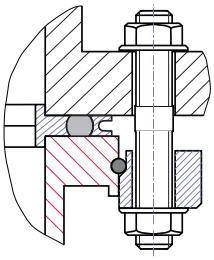

➔ Mind that the sealing surfaces are not damaged.

1) Put the collar flange over the high vacuum flange of the turbopump.
2) Insert the retaining ring into the groove of the high vacuum flange.
3) Fasten the turbo pump with collar flange and centering ring to the counter flange as shown in the graphic.
4) Use the required number of **12** stud screws and nuts.
5) Tighten the nuts crosswise in three steps.
6) Tightening torque DN 200: 5, 10, 16 ± 1 Nm

5.4.3 Installation of ISO-F with ISO-F flange

The connection types for installation of ISO-F to ISO-F flange are "hex screw and threaded hole," "stud screw and threaded hole," and "stud screw and through hole".

For the installation the following components are exclusively authorized:

- the valid mounting kit of the Pfeiffer Vacuum accessories programme
- mounting materials including protection screen or splinter shield are optionally available

Hexagon screw and threaded hole

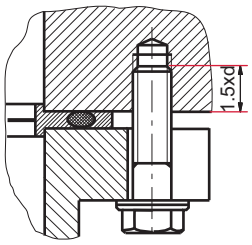

➔ Mind that the sealing surfaces are not damaged.

1) Connect the flanges according to the drawing and with the component parts of the mounting kit.
2) Use the required number of **12** hex screws with washer.
3) Screw hex screws 1.5 x d into the threaded holes.
   – The tensile strength of the flange material must be at least 270 N/mm^2 in all operating conditions.
4) Tighten the hex screws crosswise in three steps.
5) Tightening torque DN 200: 10, 20, 38 ± 3 Nm

Stud screw and threaded hole

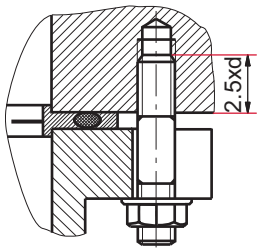

➔ Mind that the sealing surfaces are not damaged.

1) Use the required number of **12** stud screws and nuts.
2) Screw in the stud screws with the shorter threaded end 2.5 x d in the bore holes on the counter flange.
3) Connect the flanges according to the drawing and with the component parts of the mounting kit.
4) Tighten the nuts crosswise in three steps.
5) Tightening torque DN 200: 10, 20, 38 ± 3 Nm

Stud screw and through hole

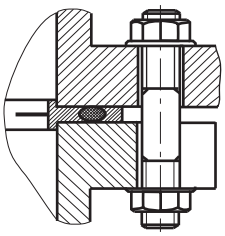

➔ Mind that the sealing surfaces are not damaged.

1) Connect the flanges according to the drawing and with the component parts of the mounting kit.
2) Use the required number of **12** stud screws and nuts.
3) Tighten the nuts crosswise in three steps.
4) Tightening torque DN 200: 10, 20, 38 ± 3 Nm

5.4.4 Installation of CF- flanges

NOTICE

Assembly of CF flanges!

Loss of sealing capability due to a lack of cleanliness when handling the sealing and CF flange.

➔ Assemble the sealing dry and oil-free.
➔ Always wear gloves when handling the components.
➔ Do not damage the surfaces and cutting edges.

The connection types for installation of CF to CF flange are "hexagon screw and through hole", "stud screw and threaded hole" as well as "stud screw and through hole".

- the valid mounting kit of the Pfeiffer Vacuum accessories programme
- A copper seal
- protection screen or splinter shield are optionally

Hexagon screw and through hole

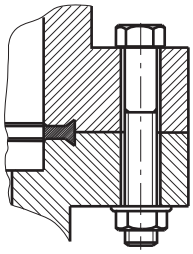

1) If used: Insert protective screen or splinter shield with the clamping lugs downward into the high vacuum flange of the turbopump.
2) Place the seal exactly in the hollow.
3) Connect the flanges using **24** hexagon-head screws (M8) with washers and bolts.
4) Tighten the screw connections circularly.
5) Tightening torque: 22 ± 2 Nm
6) After this, check the torque, since flowing of the sealing material may make it necessary to tighten the screws again.

Stud screw and threaded hole

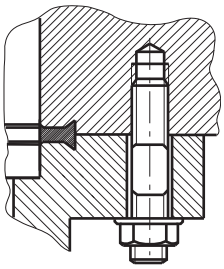

1) Screw in the stud screws (**24** pieces, M8) with the shorter threaded end into the threaded holes of the counter flange.
2) If used: Insert protective screen or splinter shield with the clamping lugs downward into the high vacuum flange of the turbopump.
3) Place the seal exactly in the hollow.
4) Connect the flanges using washers and nuts.
5) Tighten the screw connections circularly.
6) Tightening torque: 22 ± 2 Nm
7) After this, check the torque, since flowing of the sealing material may make it necessary to tighten the screws again.

Stud screw and through hole

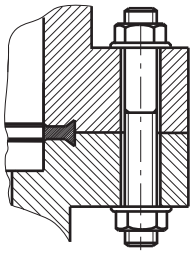

1) If used: Insert protective screen or splinter shield with the clamping lugs downward into the high vacuum flange of the turbopump.
2) Place the seal exactly in the hollow.
3) Connect the flanges using **24** hexagon-head screws (M8) with washers and bolts.
4) Tighten the screw connections circularly.
5) Tightening torque: 22 ± 2 Nm
6) After this, check the torque, since flowing of the sealing material may make it necessary to tighten the screws again.

5.5 Connecting the fore-vacuum side

Recommendation: As backing pump, use a suitable vacuum pump from the Pfeiffer Vacuum programme.

WARNING

Damage to health due to poisonous gases

Process gases can damage health and contaminate the environment.

➔ Safely lead away the gas emission from the backing pump!

➔ Observe all safety recommendations of the gas producer.

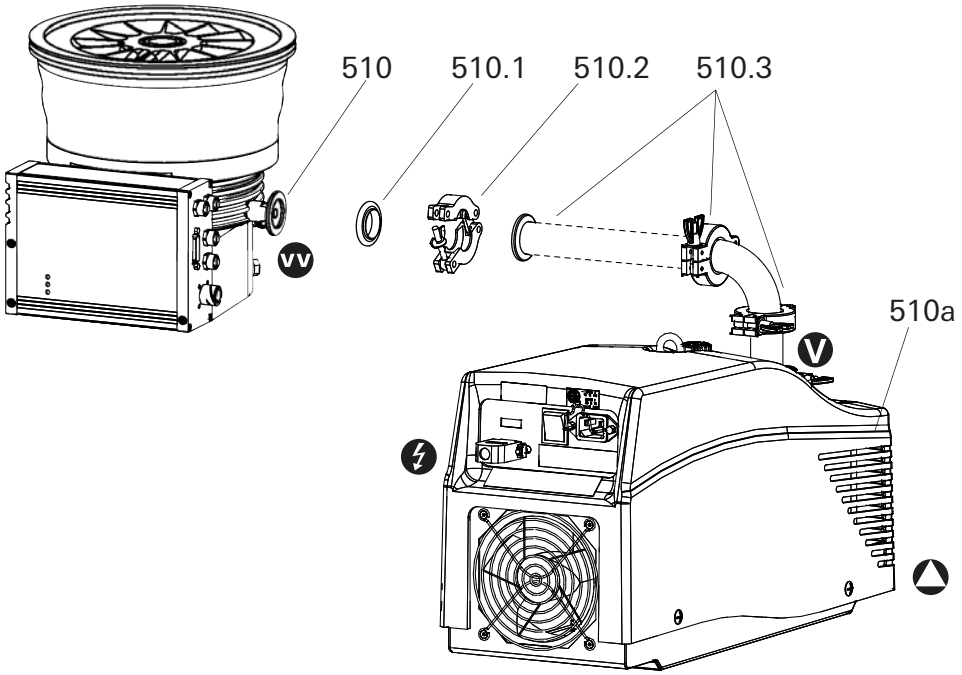

Fig. 5: Connecting the backing pump

510	Fore-vacuum connection	510.1	Centering ring	510.3	Vacuum components
510a	Backing pump	510.2	Clamping ring		

NOTICE

Design of the fore-vacuum connection regarding sudden twisting of the pump

If the rotor suddenly blocks the connection of high vacuum flanges of types ISO-KF or ISO-K can lead to twisting despite proper installation.

➔ Keep masses small, which can be installed directly to the pump.

➔ Connect flexible line elements directly to the turbopump, if necessary.

➔ With rigid pipe connections: Install bellows for attenuation of vibrations in the connection line.

➔ Connect the fore-vacuum line with small-flange components or threaded hose couplings. Do not narrow the free cross section of the fore-vacuum flange!

➔ The backing pump is connected electrically via a relay box.

➔ For connection and operation of the backing pump see its operating instructions.

Backing pump control

Backing pump control via electronic drive unit of the turbopump is possible using a relay box or respective connection cables of the accessory programme.

➔ Refer to the operating instructions of the respective accessory.

5.6 Connections to the turbopump

5.6.1 Electronic drive unit

Turbopumps with integrated electronic drive unit are designed for various applications. Therefore different connection panels are available.

- TM 700 in standard version
- TM 700 PB for Profibus linking
- TM 700 E74 in dependence on specification SEMI E74
- TM 700 DN for DeviceNet linking

Detailed description for function, configuration and operation with the respective connection panel are given in the specific operating instructions for the electronic drive unit.

5.6.2 Earthing

Pfeiffer Vacuum recommends to connect an appropriate earthing wire to derive applicative interferences.

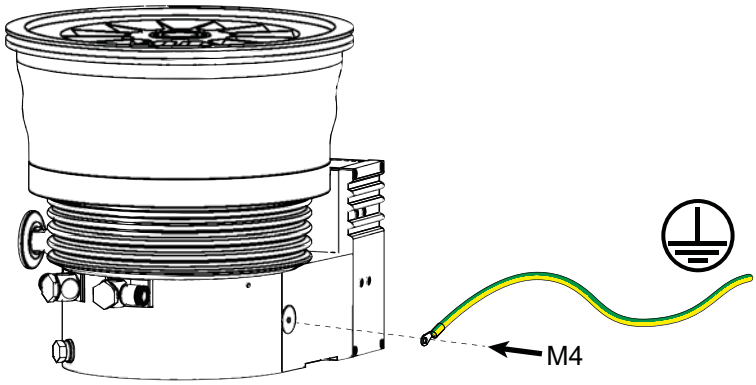

Fig. 6: Installing the earthing connection

5.6.3 Power and electrical supply

For voltage supply of the electronic drive unit TM 700, only use original power supplies (e.g. TPS 400 or DCU 400). Use of other power supplies only after consultation with Pfeiffer Vacuum. Connecting cables are available from the Pfeiffer Vacuum accessories.

WARNING

Danger of electric shock

In case of defect, the parts connected to the mains supply are under voltage.

➔ Always keep the mains connection freely accessible so you can disconnect it at any time.

➔ Make sure that the voltage of the turbopump is valid.

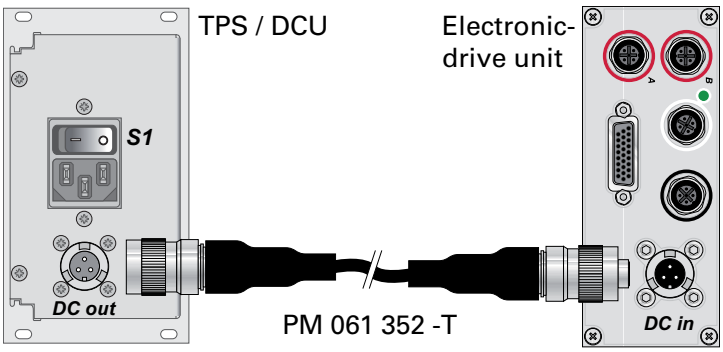

➔ Switch off switch **S1** on the power pack (position "0").

➔ Insert the connection cable with the socket in the connection "*DC in*" on the electronic drive unit and close the bayonet lock.

➔ Insert the connection cable with the plug in the connection "*DC out*" on the power supply and close the bayonet lock.

5.7 Accessory connection

Up to 4 accessories can be connected to the electronic drive unit TM 700. M12 sockets with the designation "*accessory*" are available for this purpose. The accessory connections have been preconfigured at the factory. If the units listed below are connected with the preconfigured connection, they are immediately ready for operation according to the factory settings. It is possible to connect other accessories; to do so, settings must be made on the electronic drive unit.

➔ To connect two units to one accessory connection, use the appropriate Y-Connector from the Pfeiffer Vacuum range of accessories.

➔ Connect the adapter to the appropriate red-coded connection on the TM 700.

➔ Settings can be made via the interfaces of the TM 700 (*remote*, *RS-485*, *Profibus* or *DeviceNet*).

Accessory connection	Connection with Y-connector	Preset accessory
Accessory A	Acc. A to Y-1	Air cooling unit
Accessory A	Acc. A to Y-2	Backing pump
Accessory B	Acc. B to Y-1	Venting valve
Accessory B	Acc. B to Y-2	Casing heating unit

Table 1: Overview of factory preset accessory connections on the TM 700

5.7.1 Venting valve

The Pfeiffer Vacuum venting valve is used for automatic venting in case of shut-down or power failure.

The permissible connection pressure is max. 1500 hPa absolute.

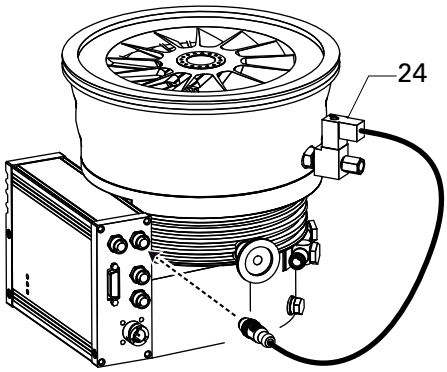

Fig. 7: Connecting the venting valve 24

➔ Plug in and fix the accessory's control lead to the corresponding accessory connection port on the electronic drive unit.

➔ Default for the venting valve is "*accessory B1*".

➔ If neccessary install a venting gas supply (e.g. inert gas) to the intake (G 1/8") of the solenoid valve.

5.7.2 Air cooling

As an option, turbopumps with the electronic drive unit TM 700 may be operated with air cooling up to an ambient temperature of +35 °C.

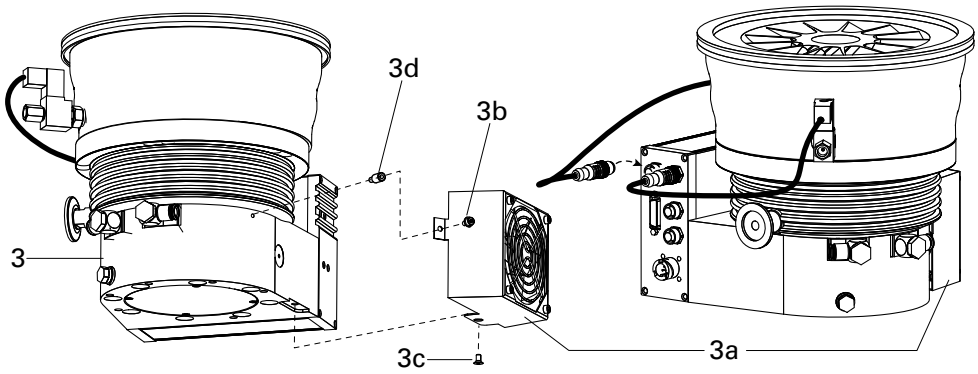

Fig. 8: Connecting the air cooling

3	Pump lower part	3b	Allen head screw	3d	Threaded adapter
3a	Air cooling unit	3c	Counter sunk screw		

➔ Insert the threaded adapter into the designated borehole of the pump lower part.

➔ Fix the Pfeiffer Vacuum air cooling unit to the holes of the turbopump and the threaded adapter using two screws.

➔ Plug in and fix the accessory's control lead to the corresponding accessory connection port on the electronic drive unit.

➔ Default for air cooling is "*accessory A1*".

5.7.3 Sealing gas connection

The turbopump must be operated with sealing gas to protect it, such as in the case of unclean processes or high gas throughput. The supply is made via a sealing gas valve or alternatively via a sealing gas throttle without control. The activation of the control valve for the sealing gas connection is not pre-installed in the electronic drive unit and has to be configured via their interfaces.

The permissible connection pressure is max. 1500 hPa absolute.

- When operating the pump with more than 50 % of the maximum gas throughput, sealing gas must be used to ensure rotor cooling.
- The sealing gas flow rate amounts 12-15 sccm for the HiPace 800 M.

Sealing gas supply with control valve

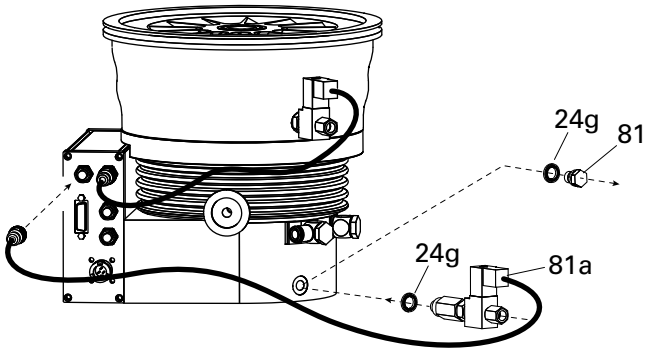

Fig. 9: Connecting the sealing gas valve

24g	Seal ring	81	Locking screw	81a	Sealing gas valve

➔ Unscrew the locking screw with seal ring out of the sealing gas connection.

➔ Screw the sealing gas valve with seal ring into the sealing gas connection.

➔ Insert the control cable of the accessory into a free accessory connector on the TM 700 and tighten.

➔ Make the settings and control via the interfaces of the electronic drive unit.

➔ Install the sealing gas supply (e.g. inert gas) via a connection adapter or on the inlet side (G 1/8") of the control valve.

Sealing gas supply without control valve

➔ Unscrew the locking screw with seal ring out of the sealing gas connection.

➔ Screw the sealing gas throttle with sealing ring into the sealing gas connection.

5.7.4 Heating jacket

The turbopump and vacuum chamber can be heated to reach the ultimate pressure more quickly. Use of a heating jacket is only permissible for pumps with the high vacuum flange in stainless steel design. The heating duration depends on the degree of contamination as well as the ultimate pressure to be reached and should be at least 4 hours.

NOTICE

Dangerous excess temperatures

Process-related high temperatures can result in impermissible excess temperatures and thus damage to the turbopump.

➔ Water cooling must be used when employing a casing heating or during operation with heated vacuum chambers.

➔ Do not introduce any additional energy into the pump *(see p. 27, chap. 6.1)*.

CAUTION

Risk of burns

High temperatures arise when the turbopump or vacuum chamber are baked out. As a result, there is a danger of burns from touching hot parts, even after the casing heating is switched off!

➔ Thermally insulate heating jacket, pump housing and vacuum chamber, if possible during installation.

➔ Do not touch heating jacket, pump casing and vacuum chamber during bake out.

- When using a casing heating and a water cooling unit the temperature of the connected flange of the vacuum chamber must not exceed 120 °C.
- The maximum permissible rotor temperature for the turbopump is 120 °C. If high temperatures arise for process reasons, the radiated heat input must not exceed 4.2 W. Install suitable screening sheets, if necessary (design information on request).

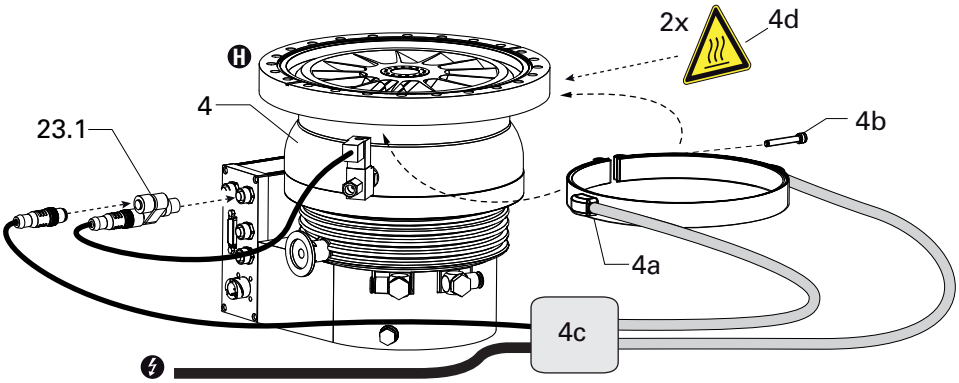

Fig. 10: Connecting the heating jacket

4	Pump casing	4b	Fixing screw	4d	Warning sticker
4a	Heating jacket	4c	Heating relay box	23.1	Y-Connector for accessories

➔ Bend open the outer heating jacket on the tensioning strap and place it sidewards on to the cylindrical segment of the pump casing.
- Do not bend the heating straps!
- The heating jacket must seat completely on the casing segment.

➔ Fix the heating jacket with the fixing screw on the casing.
- Observe the tightening torque for the fixing screw!

Fixing screw	Tightening torque in cold condition	Tightening torque during the heating-up	Singular retightening after the cooling down
M5	6 Nm	7 Nm	7 Nm
M6	11 Nm	12 Nm	12 Nm

Table 2: Tightening torques for fixing screws of heating jackets

➔ Plug in and fix the accessory's control lead to the corresponding accessory connection port on the electronic drive unit.
- In case of double assignment (e.g. by venting valve) use a Y-Connector of the accessories program.

➔ Default for the casing heating is "*accessory B2*".

➔ Establish the mains supply for the relay box according to the accessory operating instructions.
- Make sure the supply voltage for the backing pump is valid.

5.7.5 Water cooling

The turbopumps HiPace 800 M with TM 700 have water cooling as standard equipment.

- In case of increased backing pressure (> 0.1 hPa) and/or operation with high gas throughputs, either air or water cooling may be used.
- Generally use water cooling if the ambient temperature is > +35 °C.

Cooling water requirements

Cooling water connection	Swiveling screw-fitting with plug and socket connection
Hose lines	External diameter 8 mm Internal diameter 6 mm

Cooling water quality	filtrated, mechanically clean, optically clear, no turbidity, no sediments, chemically neutral
Oxygen content max.	4 mg/kg
Chloride content max.	100 mg/kg
Water hardness max.	10 °dH 12.53 °e 17.8 °fH 178 ppm $CaC0_3$
Consumption of potassium permanganate max.	10 mg/kg
Carbon dioxide content max.	undetectable
Ammonia content max.	undetectable
pH-value	7 - 9
Fore-line overpressure max.	6000 hPa
Cooling water temperature	refer to "Technical Data"
Cooling water consumption at max. gas throughput	refer to "Technical Data"

Connecting to a cooling water system

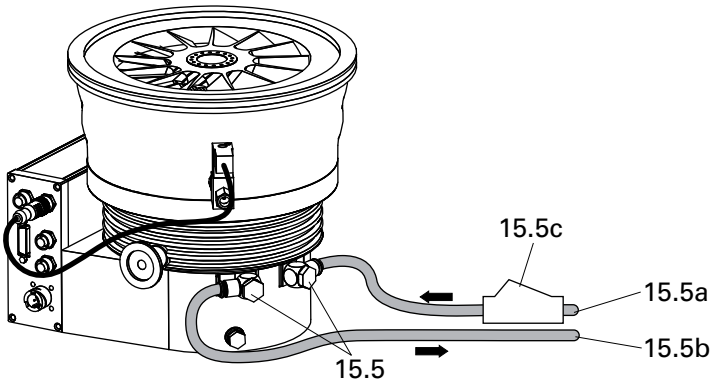

Fig. 11: Connecting the cooling water

15.5 Cooling water connection
15.5a Fore-line
15.5b Return line
15.5c Dirt trap

➔ Insert hoses for the water cooling fore- and return-line as far as they will go in one cooling water connection each.

➔ **Recommendation:** install dirt trap in the fore-line.

➔ Torque of the banjo fitting: **3 - 3.5** Nm.

6 Operation

NOTICE

Low-maintenance operation

Safety bearings prevent contact between the rotor and stator in the event of magnetic bearing overload, making them subject to wear. Extend safety bearing service life by:

➔ Not subjecting running pumps to knocks, vibrations or position changes, particularly tilting movements.
➔ Avoiding sudden pressure fluctuations on the high-vacuum or pre-vacuum side during operation.
➔ Observing the maximum rate of pressure rise.
➔ Only aerating the pump via the venting valve supplied.
➔ Not switching off the pump by disconnecting the mains power supply.

6.1 Commissioning

The following important settings are programmed in the electronic drive unit ex factory.

- Parameter **[P:027]** Gas mode: 0 = heavy gases
- Parameter **[P:030]** Vent mode: 2 = direct venting
- Parameter **[P:700]** Set value max. run-up time monitoring: 8 min
- Parameter **[P:701]** Rotation speed switchpoint: 80% of the nominal roation speed
- Parameter **[P:707]** Set value in rotation speed setting mode: 65 % of the nominal rotation speed
- Parameter **[P:708]** Set value power consumption: 100 %
- Parameter **[P:721]** Venting time: 3600 s

➔ When water cooling is used: Open cooling water supply and check the flow.
➔ When sealing gas is used: Open the sealing gas supply and check the flow.
➔ Establish the mains for the power supply.

NOTICE

Risk of destroying the pump by inputting too much energy

Simultaneous loading by means of high drive power (gas flow rate, fore-vacuum pressure), high heat radiation, or strong magnetic fields results in uncontrolled heating of the rotor and may destroy the pump.

➔ Reduced limit values apply when combining these loads.
➔ If necessary consult with Pfeiffer Vacuum.

NOTICE

Danger of the pump being destroyed

Pumping of gases with a higher molecular mass in the wrong gas mode can lead to destruction of the pump.

➔ Ensure the gas mode is correctly set.
➔ Contact Pfeiffer Vacuum before using gases with a greater molecular mass (> 80).

6.1.1 Magnetic bearing calibration

In rare cases, the magnetic bearing sensors may trigger re-calibration on enabling of the drive electronics. This will result in regular metallic knocking noises, but is not connected to wear on the safety bearings.

6.2 Operation modes

The following operation modes are available:

- Operation via "*remote*" connection
- Operation via RS-485 and Pfeiffer Vacuum display and control units or PC
- Operation via field bus

6.3 Function description

WARNING

Danger due to open high vacuum flange

The rotor of the turbopump turns at high speed. If the high vacuum flange is open, there is a danger of cut injuries and that the pump can be destroyed by objects falling into it.

➔ Never operate the pump with an open high vacuum flange.

6.3.1 Operation via "*remote*" connection

Remote control is possible via the 26-pin D-sub connector labelled "*remote*" on the electronic drive unit. The accessible individual functions are mapped to "PLC levels".

➔ Consider the following manuals for the operation via remote control:
- Operating instructions "Electronic drive unit TM 700"

6.3.2 Operation with DCU or HPU

➔ Consider the following manuals for the operation via Pfeiffer Vacuum display and control units:
- Operating instructions "DCU"
- Operating instructions "HPU"
- Operating instructions "Electronic drive unit TM 700"

➔ Switch on the supply voltage with switch S1 on the power supply or on the DCU 400.

➔ Settings are possible via interface RS-485 by using DCU, HPU or PC.

After operating voltage is applied, the TM 700 performs a self-test to check the supply voltage. Once the self-test has been successfully completed on the TM 700, the turbopump and the backing pump - if connected - begin to operate.

6.3.3 Operation via fieldbus

Integrating and operating Pfeiffer Vacuum turbopumps in the customer's field bus system is possible for electronic drive units with a corresponding field bus panel.

➔ Consider the following manuals for the operation via field bus:
- Operating instructions for the electronic drive unit with the respective connection panel

6.4 Monitoring of the operation conditions

6.4.1 Temperature monitoring

The drive power is reduced in case of impermissible motor temperature or impermissibly high housing temperature. This can cause falling below the rotation speed switchpoint and so result in turning off the turbopump.

6.4.2 Operation display via LED

LEDs in the front panel of the electronic drive unit show basic operating conditions of the turbopump. A differentiated malfunction and warning display is possible only for operation with DCU or HPU.

LED	Symbol	LED status	Display	Meaning
Green		Off		currentless
		On, flashing		"Pumping Station OFF", rotation speed ≤ 60 min^{-1}
		On, invers flashing		"Pumping Station ON", set rotation speed not attained
		On, constantly		"Pumping Station ON", set rotation speed attained
		On, blinking		"Pumping Station OFF", rotation speed > 60 min^{-1}
Yellow		Off		no warning
		On, constantly		Warning
Red		Off		no malfunction
		On, constantly		Malfunction

Fig. 12: Behaviour and meaning of LEDs on the electronic drive unit

6.4.3 Safety bearing stress

The level of stress on the safety bearings is linked to the severity of the disruptive influences on the running rotor. The stress on the safety bearings is expressed as a percentage of the overall possible stress due to the drive electronics and can be viewed via the RS-485 interface using the Pfeiffer Vacuum display and control unit or PC.

6.4.4 Balance

The magnetic bearing sensorics permanently monitor the current rotor balance. The balance is expressed as a percentage of the maximum possible rotor imbalance due to the drive electronics and can be viewed via the RS-485 interface using the Pfeiffer Vacuum display and control unit or PC.

6.5 Switching off and venting

6.5.1 Switching off

After the turbopump is switched off, it must be vented to avoid contamination due to particles streaming back from the fore-vacuum area.

➔ Close the fore-vacuum: Switch off the backing pump or close a fore-vacuum valve.

➔ Switch off the turbopump on the control unit or via remote control.

➔ Venting (possibilities see below)

➔ For water cooling: Shut off the water supply.

6.5.2 Electrical brake

The turbopump is equipped with an electric brake. It supports rapid deceleration of the rotor until standstill.

➔ Settings are possible via interface RS-485 by using DCU, HPU or PC.

6.5.3 Emergency power supply

NOTICE

Increased wear and damage due to incorrect operation

Active magnetic bearings require a constant power supply. The motor acts as a generator and supplies the drive electronics in the event of a power failure. Below a speed of approx. 6000 1/min, the kinetic energy of the rotor will no longer be sufficient to supply the magnetic bearings. The drive electronics will switch off completely. The rotor will run down audibly in the safety bearings.

➔ Do not switch off the pump by disconnecting the mains power supply.

- The green LED on the drive electronics shows the recent operating status.
- The yellow LED on the electronic drive unit lights (warning "undervoltage).

6.5.4 Venting

Clocked venting

The electronic drive unit controls the venting rate by clocking the venting valve. Thus the turbopump is always vented quickly and safely without magnetic bearing overload.

Venting with Pfeiffer Vacuum Venting Valve

NOTICE

Danger of wear or damage of the pump

Uncontrolled venting can lead to magnetic bearing overload and thus to safety bearing wear.

➔ Only vent the pump via the provided venting valve.
➔ Do not replace the Pfeiffer Vacuum venting valve by other venting units.
➔ It is recommended first to vent via the Pfeiffer Vacuum venting valve until a rotation speed of 6000 rpm, before using additional venting units.
➔ Observe the maximum permissible venting flow rate.

➔ Vent turbopump via the venting connection with oil-free, dry air or inert gas.
➔ Enable venting via the functions of the electronic drive unit.
➔ Settings are possible via interface RS-485 by using DCU, HPU or PC.

Venting rotation speed	Switch off the pumping station	Mains power failure[1)]
50 % of the nominal rotation speed	Venting valve opens for 3600 s (1 h, works setting)	Venting valve opens for 3600 s (1 h, works setting)

[1)]When mains power is restored the venting procedure is aborted.

Basic information for the rapid venting

Venting of the vacuum chamber in two steps. Ask for details on individual solutions from Pfeiffer Vacuum.

➔ Vent for 20 seconds at a rate of pressure rise of max. 15 hPa/s.
  – The valve cross section for the venting rate of 15 hPa/s must be adapted to the size of the vacuum chamber.
  – For small vacuum chambers, use the Pfeiffer Vacuum venting valve.
➔ Then vent with an additional venting valve of any desired size.

7 Maintenance / replacement

WARNING

Contamination of parts and operating fluid by pumped media is possible.

Poisoning hazard through contact with materials that damage health.

➔ In the case of contamination, carry out appropriate safety precautions in order to prevent danger to health through dangerous substances.

➔ Decontaminate affected parts before carrying out maintenance work.

NOTICE

Disclaimer of liability

Pfeiffer Vacuum accepts no liability for personal injury or material damage, losses or operating malfunctions due to improperly performed maintenance. The liability and warranty entitlement expires.

7.1 Maintenance intervals and responsibilities

- Clean the turbopump externally with a lint-free cloth and little industrial alcohol.
- Replace electronic drive unit yourself.
- For all other cleaning, maintenance or repair work, please contact your Pfeiffer Vacuum service location.

7.2 Replacing the electronic drive unit

NOTICE

Damages to the pump and drive

Even after the mains power is switched off, the subsequently running pump delivers electric power to the electronic drive unit. There is a danger of electric body contact by premature separating the pump from the electronic drive unit.

➔ Never separate the electronic drive unit from the pump when the mains power is connected or the rotor is running.

Operating parameters of the electronic drive unit

The factory operating parameters are always preset with replacement shipments.

➔ The use of a HPU enables the storing and the reuse of an existing parameter record.

➔ Reset any individually changed application parameters.

➔ Refer to the manual "Electronic drive unit".

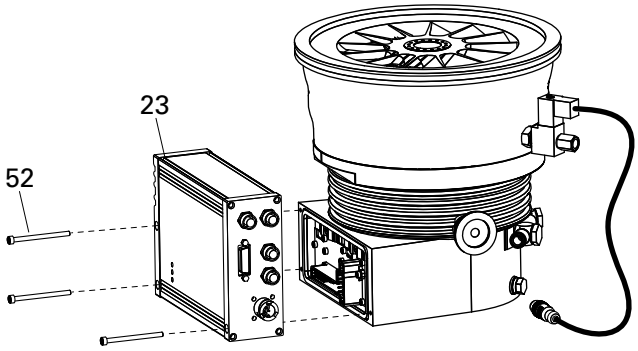

Fig. 13: Assembly / disassembly of the TM 700

23 Electronic drive unit 52 Allen head screw

➔ Do not exercise any mechanical load on the electronic drive unit.

➔ Turn off the vacuum pump, vent to atmospheric pressure and allow to cool.

➔ Only separate the pump and the electronic drive unit from each other after disconnecting the supply voltage and the complete standstill of the pump.
➔ Remove the vacuum pump from the system, if necessary.
➔ Unscrew the venting valve control lead from the electronic drive unit.
➔ Unscrew Allen head screws (3x) from the electronic drive unit.
➔ Pull the electronic drive unit off the pump.
➔ Screw on and connect new electronic drive unit to the turbopump.
– Tightening torque: **2.5 Nm**.

7.2.1 Magnetic bearing calibration

In rare cases, the magnetic bearing sensors may trigger re-calibration on enabling of the drive electronics. This will result in regular metallic knocking noises, but is not connected to wear on the safety bearings.

7.2.2 Rotation speed set value

The typical nominal rotation speed of a turbopump is factory-set in the electronic drive unit. If the electronic drive unit is replaced or a different pump type is used, the reference set value of the nominal rotation speed must be confirmed. This procedure is part of a redundant safety system for avoiding excess rotation speeds.

HiPace	Nominal rotation speed confirmation [P:777]
300	1000 Hz
400 / 700 / 800	820 Hz

➔ Adjust the parameter **[P:777]** according to the pump type.

8 Decommissioning

8.1 Shutting down for longer periods

WARNING

Contamination of parts and operating fluid by pumped media is possible.
Poisoning hazard through contact with materials that damage health.

➔ In the case of contamination, carry out appropriate safety precautions in order to prevent danger to health through dangerous substances.
➔ Decontaminate affected parts before carrying out maintenance work.

If the turbopump should be shut down for longer than a year:

➔ Remove the vacuum pump from the system, if necessary.
➔ Close the high vacuum flange of the turbopump.
➔ Evacuate turbopump via the fore-vacuum flange.
➔ Vent turbopump via the venting connection with oil-free, dry air or inert gas.
➔ Close the flange openings by using the original protective covers.
➔ Close further connection ports by using the corresponding protective covers.
➔ Place pump upright on rubber feet.
➔ Store the pump only indoors at temperatures between -25 °C and +55 °C.
➔ In rooms with moist or aggressive atmospheres, the pump must be airproof shrink-wrapped in a plastic bag together with a bag of desiccant.

8.2 Re-starting

➔ Check turbopump for contamination and moisture.
➔ Clean the turbopump externally with a lint-free cloth and little industrial alcohol.
➔ If necessary, have Pfeiffer Vacuum Service clean the turbopump completely.
➔ Installation and commissioning in accordance with the operating instructions.

8.3 Disposal

Products or parts thereof (mechanical and electrical components, operating fluids, etc.) may cause environmental burden.

➔ Safely dispose of the materials according to the locally applicable regulations.

9 Malfunctions

If malfunctions on the pump occur, you will find possible causes and instructions for repair in the following table.

9.1 Rectifying malfunctions

Problem	Possible causes	Remedy
Pump will not start; none of the built-in LEDs on the TM 700 lights up	• Electrical supply interrupted	⇨ Check plug contacts on the power supply ⇨ Check supply lines on the power supply ⇨ Check the output voltage (48 V DC) on the connection "*DC out*" of the power supply ⇨ Check the plug contacts on the TM 700
	• Operating voltage incorrect	⇨ Apply correct operating voltage ⇨ Observe the rating plate
	• No operating voltage applied	⇨ Apply operating voltage
	• TM 700 defective	⇨ Exchange the TM 700 ⇨ Contact the Pfeiffer Vacuum Service
Pump will not start; green LED on the TM 700 is flashing	• At operation without control panel: Pins 1-3, 1-4 or 1-14 are not connected on the "*remote*" connection	⇨ Connect the pins 1-3, 1-4 or 1-14 on the "*remote*" connection
	• At operation via RS-485: Bridge at Pin 1-14 prevents control commands	⇨ Remove the bridge at the "*remote*" connection ⇨ Remove the mating plug from the "remote" connection.
	• At operation via RS-485 (without counter plug): Parameters of the electronic drive unit not set	⇨ Set parameters **[P: 010]** and **[P: 023]** "ON" via interface RS-485. ⇨ Please refer to operating instructions of the electronic drive unit.
	• Voltage drop in the cable too high	⇨ Use a suitable cable
Pump does not attain the final rotational speed within the specified run-up time	• Fore-vacuum pressure too high	⇨ Ensure function and suitability of the backing pump
	• Leak	⇨ Perform leak detection ⇨ Check sealings and flange fastenings ⇨ Eliminate leaks
	• Gas throughput too high	⇨ Reduce process gas supply
	• Rotor runs hard, bearing defective	⇨ Check the bearing for noises ⇨ Check safety bearing stress via "*RS 485*"[1)] ⇨ Contact the Pfeiffer Vacuum Service
	• Setpoint for run-up time to low	⇨ Extend the run-up time via connection "*RS 485*"[1)]
	• Thermal overload: – Lack of air ventilation – Water flow too low – Fore-vacuum pressure too high – Ambient temperature too high	⇨ Reduce thermal loads – Ensure adequate cooling – Ensure the cooling water flow – Lower the fore-vacuum pressure – Adjust ambient conditions
Pump does not attain the ultimate pressure	• Pump is dirty	⇨ Bake out the pump ⇨ Cleaning in case of heavy contamination – Contact the Pfeiffer Vacuum Service
	• Vacuum chamber, pipes or pump are leaky	⇨ Leak detection starting from the vacuum chamber ⇨ Eliminate leaks
Red LED on the TM 700 is on	• Collective fault	⇨ Reset by switching the mains OFF/ON ⇨ Reset via pin 13 on the "*remote*" connection ⇨ Differentiated malfunction display is possible via "*RS 485*"[1)] ⇨ Contact the Pfeiffer Vacuum Service

[1)] If no Pfeiffer Vacuum display and control unit is available, please contact the Pfeiffer Vacuum Service.

10 Service

Pfeiffer Vacuum offers first-class service!

- Maintenance / repair in the nearby ServiceCenter or ServicePoint
- Fast replacement with exchange products in mint condition
- Advice on the most cost-efficient and quickest solution

Detailed information, addresses and forms at: **www.pfeiffer-vacuum.com (Service**).

Maintenance and repair in the Pfeiffer Vacuum ServiceCenter

The following steps are necessary to ensure a fast, smooth servicing process:

➔ Download the forms "Service Request" and "Declaration on Contamination".[1)]
➔ Fill out the "Service Request" form and send it by fax or e-mail to your Pfeiffer Vacuum service address.
➔ Include the confirmation on the service request from Pfeiffer Vacuum with your shipment.
➔ Fill out the declaration on contamination and include it in the shipment (required!).
➔ Dismantle all accessories.
➔ Leave electronic drive on the pump.
➔ Close the flange openings by using the original protective covers.
➔ If possible, send pump or unit in the original packaging.

Sending of contaminated pumps or devices

No units will be accepted if they are contaminated with micro-biological, explosive or radioactive substances. “Hazardous substances” are substances and compounds in accordance with the hazardous goods directive (current version). If pumps are contaminated or the declaration on contamination is missing, Pfeiffer Vacuum performs decontamination at the shipper's expense.

➔ Neutralise the pump by flushing it with nitrogen or dry air.
➔ Close all openings airtight.
➔ Seal the pump or unit in suitable protective film.
➔ Return the pump/unit only in a suitable and sturdy transport container and send it in while following applicable transport conditions.

Exchange unit

The factory operating parameters are always preset with exchange units. If you use changed parameters for your application, you have to set these again.

Service orders

All service orders are carried out exclusively according to our repair conditions for vacuum units and components.

1) Forms under www.pfeiffer-vacuum.com

11 Spare parts HiPace 800 M

Item	Designation	Size	Order number	Notes	Pieces	Order qty.
15.5	Swiveling screw-fitting		P 4131 007 E	water cooling unit	2	
23	Electronic drive unit TM 700		according to the rating plate	depends on the connection panel	1	
24	Venting valve		PM Z01 291	incl. seal ring	1	

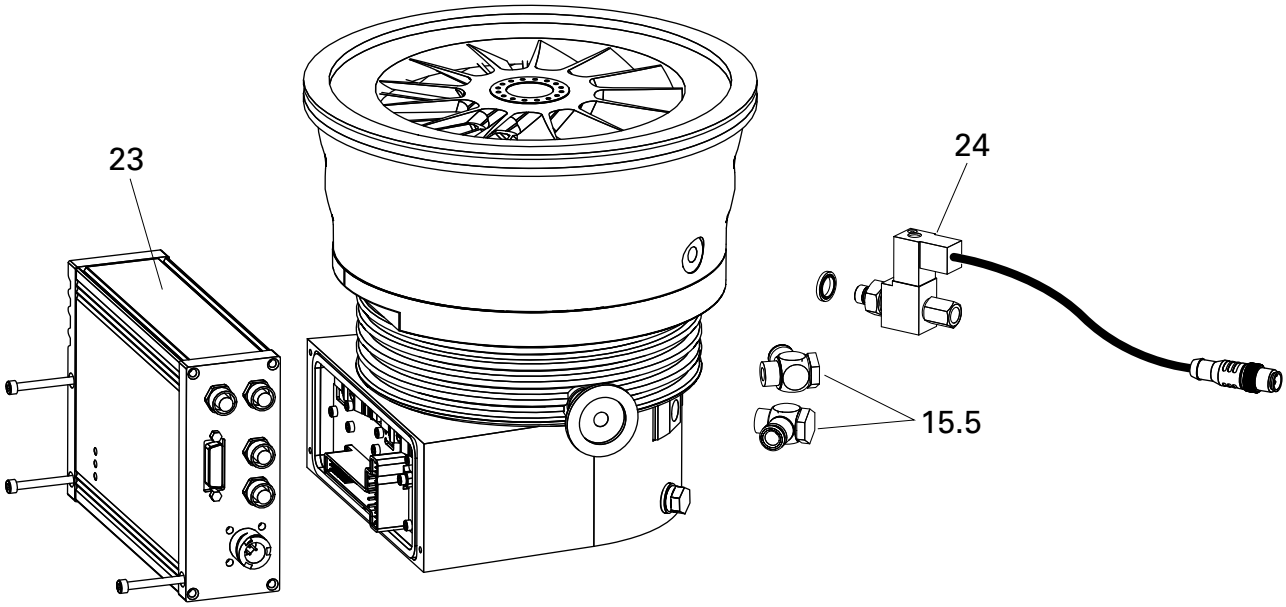

Please also specify model number of the the rating plate when ordering accessories or spare parts.

12 Accessories

Designation	DN 200 ISO-K	DN 200 CF-F	DN 200 ISO-F
Mounting kit for HiPace 800 M, DN 200 ISO-K, including coated centering ring and bracket screws	PM 016 357 -T		
Mounting kit for HiPace 800 M, DN 200 ISO-K, including coated centering ring, protection screen, bracket screws	PM 016 359 -T		
Mounting kit for HiPace 800 M, DN 200 ISO-K, including coated centering ring, splinter shield, bracket screws	PM 016 358 -T		
Mounting kit for DN 200 ISO-K to ISO-F, with collar flange, coated centering ring, hexagon bolts	PM 016 960 -T		
Mounting kit for DN 200 ISO-K to ISO-F, with collar flange, coated centering ring with splinter shield, hexagon bolts	PM 016 961 -T		
Mounting kit for DN 200 ISO-K to ISO-F, with collar flange, coated centering ring with protection screen, hexagon bolts	PM 016 962 -T		
Mounting kit for DN 200 ISO-K to ISO-F, with collar flange, coated centering ring, stud screws	PM 016 965 -T		
Mounting kit for DN 200 ISO-K to ISO-F, with collar flange, coated centering ring with splinter shield, stud screws	PM 016 966 -T		
Mounting kit for DN 200 ISO-K to ISO-F, with collar flange, coated centering ring with protection screen, stud screws	PM 016 967 -T		
Set of hexagon screws for through hole, DN 200 CF-F		PM 016 687 -T	
Set of stud screws for through hole, DN 200 CF-F		PM 016 688 -T	
Set of stud screws for through hole, DN 200 CF-F		PM 016 736 -T	
Mounting kit for HiPace DN 200 ISO-F, including coated centering ring, hexagon screws			PM 016 470 -T
Mounting kit for DN 200 ISO-F, including coated centering ring, protective screen, hexagon screws			PM 016 472 -T
Mounting kit for DN 200 ISO-F, including coated centering ring, splinter shield, hexagon screws			PM 016 471 -T
Mounting kit for DN 200 ISO-F, including coated centering ring, stud screws			PM 016 475 -T
Mounting kit for DN 200 ISO-F, including coated centering ring, protective screen, stud screws			PM 016 477 -T
Mounting kit for DN 200 ISO-F, including coated centering ring, splinter shield, stud screws			PM 016 476 -T
Centering ring with multifunction coating, DN 200 ISO-K/-F	PM 016 220 -U		PM 016 220 -U
Centering ring with multifunction coating and integrated protection screen, DN 200 ISO-K/-F	PM 016 222 -U		PM 016 222 -U
Centering ring with multifunction coating and integrated splinter shield, DN 200 ISO-K/-F	PM 016 221 -U		PM 016 221 -U
Vibration damper for HiPace 800/1200/1800, DN 200 ISO-K/F	PM 006 668 -X		PM 006 668 -X
Protection screen for DN 200 CF-F		PM 016 342	
Splinter shield for turbopumps, DN 200 CF-F		PM 016 321	
Vibration damper for HiPace 800/1200, DN 200 CF-F		PM 006 669 -X	
TPS 400, power supply 48 V DC, for wall/standard rail fitting	PM 061 343 -T	PM 061 343 -T	PM 061 343 -T
Wall rail fitting for TPS 110/180/310/400	PM 061 392 -T	PM 061 392 -T	PM 061 392 -T
TPS 401, power supply 48 V DC, 19" partial plug-in 3HU	PM 061 347 -T	PM 061 347 -T	PM 061 347 -T
Front panel kit for TPS 401	PM 061 396 -T	PM 061 396 -T	PM 061 396 -T
DCU 400, Display control unit incl. power supply	PM C01 823	PM C01 823	PM C01 823
DCU 002, Display Control Unit	PM 061 348 -T	PM 061 348 -T	PM 061 348 -T
HPU 001, Handheld Programming Unit	PM 051 510 -T	PM 051 510 -T	PM 051 510 -T
Accessories package for HPU 001/PC	PM 061 005 -T	PM 061 005 -T	PM 061 005 -T
Mains cable 208 V AC, NEMA 6-15 to C13, 3 m	P 4564 309 ZF	P 4564 309 ZF	P 4564 309 ZF
Mains cable 115 V AC, NEMA 5-15 to C13, 3 m	P 4564 309 ZE	P 4564 309 ZE	P 4564 309 ZE
Mains cable 230 V AC, CEE 7/7 to C13, 3 m	P 4564 309 ZA	P 4564 309 ZA	P 4564 309 ZA
Connection cable for HiPace with TC 400/TM 700 to power supply TPS/DCU 310/311/400/401	PM 061 352 -T	PM 061 352 -T	PM 061 352 -T
HiPace - ACP connection cable	PM 071 142 -X	PM 071 142 -X	PM 071 142 -X
Control cable for pumping stations 0.7 m	PM 061 675 AT	PM 061 675 AT	PM 061 675 AT
Extension cable M12 on M12	PM 061 747 -T	PM 061 747 -T	PM 061 747 -T
Y-connector, shielded, M12 for accessories	P 4723 013	P 4723 013	P 4723 013
Y-Connector M12 to RS-485	P 4723 010	P 4723 010	P 4723 010
Mains power socket, angled, for TC 400/TM 700	P 4723 101	P 4723 101	P 4723 101

Designation	DN 200 ISO-K	DN 200 CF-F	DN 200 ISO-F
Mains power socket TC 400/TM 700, straight	P 4723 100	P 4723 100	P 4723 100
Remote adapter for RS-485	PM 061 649 -X	PM 061 649 -X	PM 061 649 -X
Termination resistor for RS-485	PT 348 105 -T	PT 348 105 -T	PT 348 105 -T
Power separator for RS-485	PT 348 132 -T	PT 348 132 -T	PT 348 132 -T
USB converter to RS-485 interface	PM 061 207 -T	PM 061 207 -T	PM 061 207 -T
Connector M12 to RS-485	PM 061 270 -X	PM 061 270 -X	PM 061 270 -X
TIC 001, Interface converter RS-232/RS-485	PM 051 054 -T	PM 051 054 -T	PM 051 054 -T
RJ 45 interface cable on M12 for HiPace	PM 051 726 -T	PM 051 726 -T	PM 051 726 -T
Interface cable, M12 m straight/M12 m straight, 3 m	PM 061 283 -T	PM 061 283 -T	PM 061 283 -T
Interface cable, M12 m straight/ M12 m angled 0.7 m	PM 061 791 -T	PM 061 791 -T	PM 061 791 -T
Backing pump relay box, single phase 20 A, for TC 400 and TCP 350, M12 plug	PM 061 375 -T	PM 061 375 -T	PM 061 375 -T
Relay box, shielded, for backing pumps, 1-phase 7 A for TC 400/1200, TM 700 and TCP 350, M12	PM 071 284 -X	PM 071 284 -X	PM 071 284 -X
TVV 001 fore-vacuum safety valve, 230 V AC	PM Z01 205	PM Z01 205	PM Z01 205
TVV 001 fore-vacuum safety valve, 115 V AC	PM Z01 206	PM Z01 206	PM Z01 206
Heating jacket, shielded, for HiPace 400/700/800 with TC 400 PB/TM 700, 230 V AC, safety plug		PM 071 269 -T	
Heating jacket, shielded, for HiPace 400/700/800 with TC 400 PB/TM 700, 208 V AC, UL plug		PM 071 270 -T	
Heating jacket, shielded, for HiPace 400/700/800 with TC 400 PB/TM 700, 115 V AC, UL plug		PM 071 271 -T	
Venting valve, shielded, 24 V DC, G 1/8", for connection to TC 400/1200 and TM 700	PM Z01 291	PM Z01 291	PM Z01 291
Venting valve, shielded, 24 V DC, G 1/8", for connecting to TC 400,1200 and TM 700 with twisted plug 270°	PM Z01 292	PM Z01 292	PM Z01 292
Power failure venting valve, shielded, 24 V DC, G 1/8" for connection to TC 400, TM 700 and TC 1200	PM Z01 331	PM Z01 331	PM Z01 331
TTV 001, dryer for venting turbopumps	PM Z00 121	PM Z00 121	PM Z00 121
Screw-in flange, DN 10 ISO-KF, G 1/8"	PM 033 737 -T	PM 033 737 -T	PM 033 737 -T
Screw-on flange, DN 16 ISO-KF, G 1/8"	PM 016 780 -T	PM 016 780 -T	PM 016 780 -T
Push-in fitting for 6 mm hose, G 1/8"	PM 016 781 -T	PM 016 781 -T	PM 016 781 -T
Push-in fitting for 8 mm hose, G 1/8"	PM 016 782 -T	PM 016 782 -T	PM 016 782 -T
Hose nozzle for 9 mm hose, G 1/8"	PM 016 783 -T	PM 016 783 -T	PM 016 783 -T
Banjo fitting	PM 016 787 -T	PM 016 787 -T	PM 016 787 -T
Banjo fitting, small	PM 143 877 -T	PM 143 877 -T	PM 143 877 -T
Air cooling, shielded, for HiPace 400/700/800 and 300700/800 M with TC 400 PB/TM 700	PM Z01 363	PM Z01 363	PM Z01 363
Sealing gas valve, shielded for HiPace 300 with TC 400 and TM 700, TCP 350	PM Z01 312	PM Z01 312	PM Z01 312
Sealing gas throttle for HiPace 300	PM Z01 317	PM Z01 317	PM Z01 317
TIC 010, Adapter for two sensors	PT R70 000	PT R70 000	PT R70 000
IKT 010, Digital Cold Cathode Sensor	PTR 72 100	PTR 72 100	PTR 72 100
IKT 011, Digital Cold Cathode Sensor	PT R73 100	PT R73 100	PT R73 100
RPT 010, Digital Piezo/Pirani Sensor	PT R71 100	PT R71 100	PT R71 100

13 Technical data and dimensions

13.1 General

Basic principles for the Technical Data of Pfeiffer Vacuum Turbopumps:

Maximum values refer exclusively to the input as a single load.

- Recommendations of PNEUROP committee PN5
- ISO 21360; 2007: "Vacuum technology - Standard methods for measuring vacuum-pump performance - General description"
- ISO 5302; 2003: "Vacuum technology - Turbomolecular pumps - Measurement of performance characteristics"
- Ultimate pressure: using a test dome and a 48 hrs. period of baking out
- Gas throughput: water cooling; backing pump = rotary vane pump (10 m^3/h)
- Cooling water consumption: at max. gas throughput, cooling water temp. 25 °C
- Integral leak rate: using a Helium concentration of 100 %, period 10 s
- Sound pressure level: Distance 1 m to the pump

Conversion table: pressure units

	mbar	bar	Pa	hPa	kPa	Torr mm Hg
mbar	1	$1 \cdot 10^{-3}$	100	1	0.1	0.75
bar	1000	1	$1 \cdot 10^{5}$	1000	100	750
Pa	0.01	$1 \cdot 10^{-5}$	1	0.01	$1 \cdot 10^{-3}$	$7.5 \cdot 10^{-3}$
hPa	1	$1 \cdot 10^{-3}$	100	1	0.1	0.75
kPa	10	0.01	1000	10	1	7.5
Torr mm Hg	1.33	$1.33 \cdot 10^{-3}$	133.32	1.33	0.133	1
1 Pa = 1 N/m^2						

Conversion table: gas throughput units

	mbar·l/s	Pa·m^3/s	sccm	Torr·l/s	atm·cm^3/s
mbar·l/s	1	0.1	59.2	0.75	0.987
Pa·m^3/s	10	1	592	7.5	9.87
sccm	$1.69 \cdot 10^{-2}$	$1.69 \cdot 10^{-3}$	1	$1.27 \cdot 10^{-2}$	$1.67 \cdot 10^{-2}$
Torr·l/s	1.33	0.133	78.9	1	1.32
atm·cm^3/s	1.01	0.101	59.8	0.76	1

13.2 Technical data

Parameter	HiPace® 800 M	HiPace® 800 M	HiPace® 800 M
Flange (in)	DN 200 ISO-K	DN 200 CF-F	DN 200 ISO-F
Flange (out)	DN 25 ISO-KF	DN 25 ISO-KF	DN 25 ISO-KF
Pumping speed for Ar	775 l/s	775 l/s	775 l/s
Pumping speed for H_2	500 l/s	500 l/s	500 l/s
Pumping speed for He	625 l/s	625 l/s	625 l/s
Pumping speed for N_2	790 l/s	790 l/s	790 l/s
Compression ratio for Ar	$> 1 \cdot 10^{11}$	$> 1 \cdot 10^{11}$	$> 1 \cdot 10^{11}$
Compression ratio for H_2	$2 \cdot 10^{5}$	$2 \cdot 10^{5}$	$2 \cdot 10^{5}$
Compression ratio for He	$> 1 \cdot 10^{7}$	$> 1 \cdot 10^{7}$	$> 1 \cdot 10^{7}$
Compression ratio for N_2	$> 1 \cdot 10^{11}$	$> 1 \cdot 10^{11}$	$> 1 \cdot 10^{11}$
Gas throughput at full rotational speed for Ar	8 hPa l/s	8 hPa l/s	8 hPa l/s
Gas throughput at full rotational speed for N_2	13 hPa l/s	13 hPa l/s	13 hPa l/s
Fore-vacuum max. for N_2	8 hPa	8 hPa	8 hPa
Run-up time	4 min	4 min	4 min
Ultimate pressure according to PNEUROP	$< 1 \cdot 10^{-7}$ hPa	$< 5 \cdot 10^{-10}$ hPa	$< 1 \cdot 10^{-7}$ hPa
Rotation speed ± 2 %	49200 min^{-1}	49200 min^{-1}	49200 min^{-1}

Parameter	HiPace® 800 M	HiPace® 800 M	HiPace® 800 M
Rotation speed variable	20-100 %	20-100 %	20-100 %
Sound pressure level	≤ 45 dB (A)	≤ 45 dB (A)	≤ 45 dB (A)
Relative humidity of air	5-85, non-condensing %	5-85, non-condensing %	5-85, non-condensing %
Protection category	IP 54	IP 54	IP 54
Connection pressure max. for venting/sealing gas valve	1500 hPa	1500 hPa	1500 hPa
Operating voltage	48 (± 5 %) V DC	48 (± 5 %) V DC	48 (± 5 %) V DC
Operating voltage power supply	90-265 V AC	90-265 V AC	90-265 V AC
Braking time with/without venting	< 1 - 10 min	< 1 - 10 min	< 1 - 10 min
Integral leak rate	$< 1 \cdot 10^{-8}$ Pa m^3/s	$< 1 \cdot 10^{-8}$ Pa m^3/s	$< 1 \cdot 10^{-8}$ Pa m^3/s
Power consumption max.	300 W	300 W	300 W
Current consumption max.	7.5 A	7.5 A	7.5 A
Shipping and storage temperature	0-+55 °C	0-+55 °C	0-+55 °C
Mounting orientation	in any orientation	in any orientation	in any orientation
Venting connection	G 1/8"	G 1/8"	G 1/8"
Weight	17.2 kg	21.6 kg	18 kg
Cooling method, standard	Water	Water	Water
Cooling method, optional	Air, Convection	Air, Convection	Air, convection
Cooling water temperature	15-35 °C	15-35 °C	15-35 °C
Cooling water consumption	80 l/h	80 l/h	80 l/h
Permissible irradiated thermal power max.	2.4 W	2.4 W	2.4 W
Permissible magnetic field max.	5 mT	5 mT	5 mT
Interfaces	RS-485, Remote	RS-485, Remote	RS-485, Remote

13.3 Dimensions

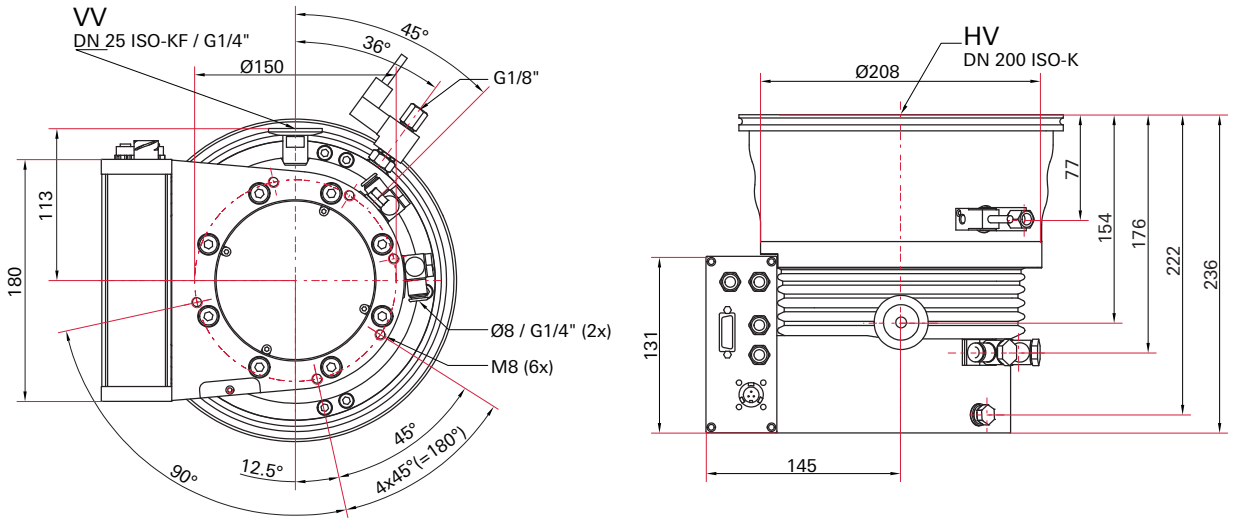

Fig. 14: HiPace 800 M, DN 200 ISO-K

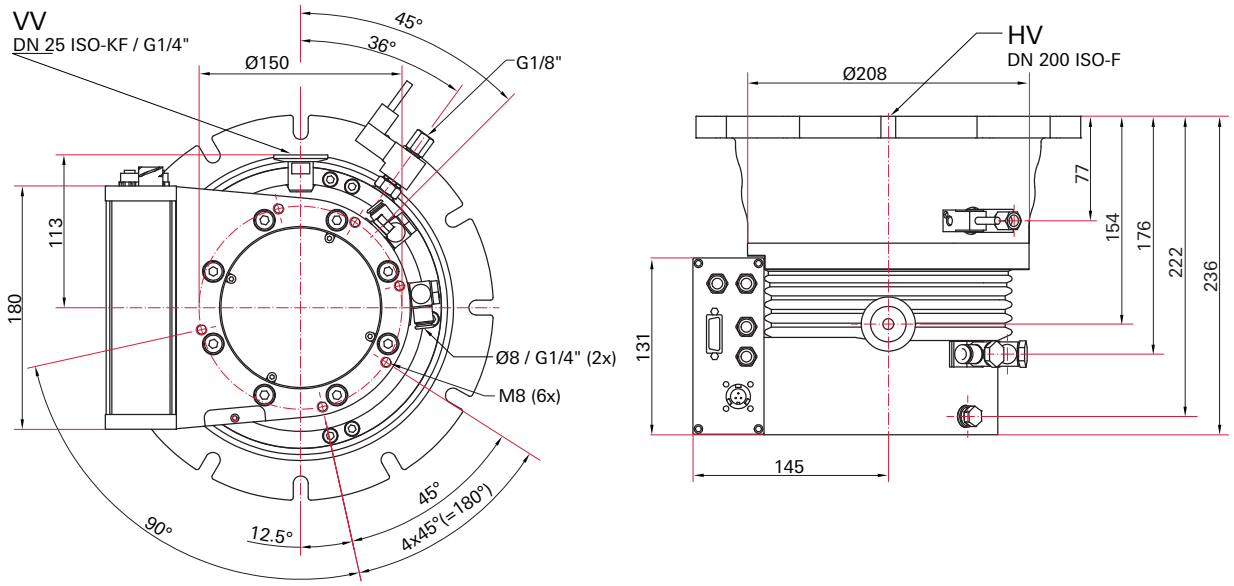

Fig. 15: HiPace 800 M, DN 200 ISO-F

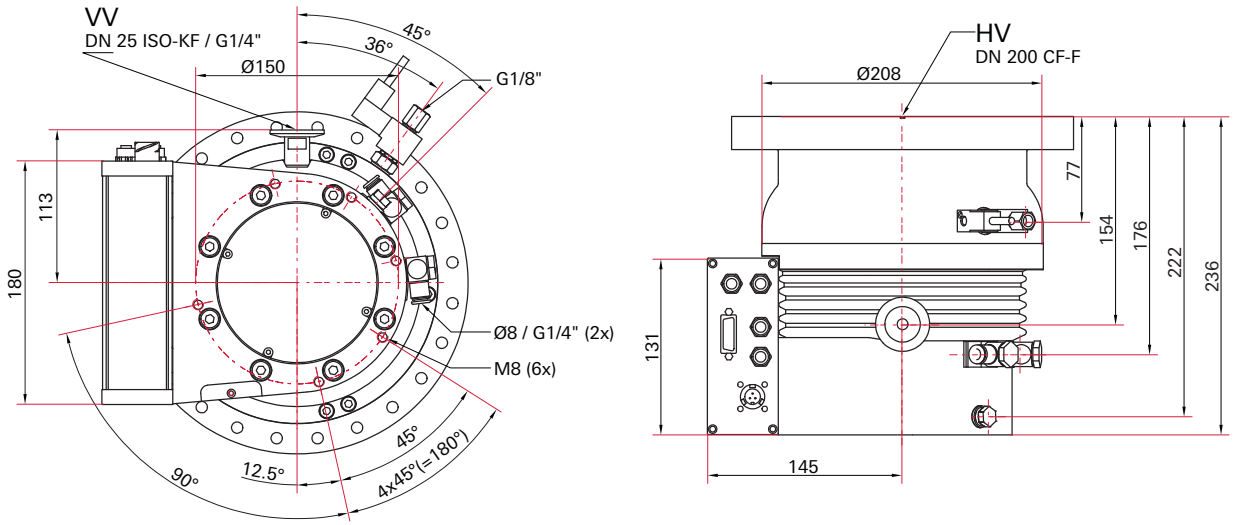

Fig. 16: HiPace 800 M, DN 200 CF-F

Declaration of conformity

We hereby declare that the product cited below satisfies all relevant provisions according to the following **EC directives**:

- **Machinery 2006/42/EC (Annex II, no. 1 A)**

The agent responsible for compiling the technical documentation is Mr. Helmut Bernhardt, Pfeiffer Vacuum GmbH, Berliner Straße 43, 35614 Aßlar.

HiPace 800 M

Harmonised standards and national standards and specifications which have been applied:

DIN EN ISO 12100 : 2011-03
DIN EN 1012-2 : 1996
DIN EN 61000-3-2 : 2010
DIN EN 61000-3-3 : 2009
DIN EN 61010-1 : 2010
DIN EN 61326-1 : 2013
DIN EN 62061 : 2013

Signature:

Pfeiffer Vacuum GmbH
Berliner Straße 43
35614 Asslar
Germany

(Dr. Ulrich von Hülsen)
Managing Director

2016-03-17

PFEIFFER VACUUM

VACUUM SOLUTIONS FROM A SINGLE SOURCE

Pfeiffer Vacuum stands for innovative and custom vacuum solutions worldwide, technological perfection, competent advice and reliable service.

COMPLETE RANGE OF PRODUCTS

From a single component to complex systems:
We are the only supplier of vacuum technology that provides a complete product portfolio.

COMPETENCE IN THEORY AND PRACTICE

Benefit from our know-how and our portfolio of training opportunities!
We support you with your plant layout and provide first-class on-site service worldwide.

Are you looking for a perfect vacuum solution? Please contact us:

Pfeiffer Vacuum GmbH
Headquarters • Germany
T +49 6441 802-0
info@pfeiffer-vacuum.de

www.pfeiffer-vacuum.com

PFEIFFER VACUUM