ANEST IWATA

ClassNK

ISO 9001

JAB CM 005

LR104996

Our product have got CSA approval.
(Canadian Standards Association)

Instruction Manual (Original Instructions)

Oil-free Scroll Vacuum Pump

ISP-250C

ISP-500C

This instruction manual includes very important warnings, cautions and operating procedure in order to operate this pump safely and efficiently.
Be sure to read this instruction manual thoroughly and fully understand before operation.
After reading it, store it in a convenient place for immediate and future reading.

※Before use, be sure to fill in the blank spaces below for future repair and after-service.

Serial No.	
Who sold it to you	
Purchase date	
When you began operation	

Declaration of Conformity

We , ANEST IWATA Corporation
3176, Shinyoshida-cho, Kohoku-ku, Yokohama 223-8501, Japan

declare in our sole responsibility that the products

Type : Scroll Vacuum Pump

Models :

ISP-250C
3-phase , 200/208/230/380/400/415/460V, 50/60Hz
1-phase , 100/115/200/230V, 50/60Hz
ISP-500C
3-phase , 200/208/230/380/400/415/460V, 50/60Hz
1-phase , 100/115/200/230V, 50/60Hz

Note : 1-phase motor provides thermal protector.

to which this declaration applies, complies with these normative documents :

2006/42/EC : Machinery Directive
EN 1012-2:1996 : Compressors and Vacuum Pumps-Safety Requirements, Part 2: Vacuum Pumps

This Declaration is based on :
Third party testing, performed by the Notified Body
TUV Rheinland Product Safety GmbH - Am Grauen Stein - D-51105 Koln

Tamotsu Fujioka ,
Manager of Vacuum Pump Dept.

Dec, 2009 YOKOHAMA
Date and Place

Important information

Be sure to read this instruction manual to understand how to operate equipment correctly. Only operators, who fully understand warnings, cautions and instructions, are to operate the equipment. Improper operation (mishandling) can cause serious bodily injury, death, fire or explosion.

Store this manual in a convenient place for immediate and future reference.

◆Regarding safety

- The safety instructions given in this manual are the minimum operating requirements. Follow all national or municipal laws and regulations pertaining to fire, electricity, and other safety regulations, as well as corporate regulations.
- Pay special attention to items which are shown by the below marks and symbols.
- Symbols and marks have the following meanings.

Examples of marks

WARNING	Indicates a potentially hazardous situation which, if not avoided, may result in serious injury or loss of life.
CAUTION	Indicates a potentially hazardous situation which, if not avoided, may result in minor or moderate injury or property damage.

Examples of symbols

	Indicates [Beware]. We will explain briefly in or near the symbol. (The example on the left is [Beware of electric shock]).
	Indicates [Prohibited action]. We will explain briefly in or near the symbol. (The example on the left is [Do not touch]).
	Indicates [Required action]. We will explain briefly in or near the symbol. (The example on the left is [Be sure to ground]).

∗ We shall not be responsible for any injury or damage caused by disregard of warnings, cautions or instructions.

Supplementary notes

Important	Indicates notes which we ask you to observe. They are helpful to achieve full performance and functionality of the equipment.

For safe operation

Below is very important information about how to safely operate the equipment.
Before operation, be sure to read and fully understand the contents.

⚠ WARNING

Be careful about lifting	**Danger of cargo collapse** Be careful to install vacuum pump using motor handle (ISP-250C mass 25kgs/1-phase, 23kgs/3-phase), or using motor eyebolt and crane with sufficient allowable load capacity (ISP-500C mass 44kgs/1-phase, 38kgs/3-phase) while paying attention to stability of suspended load. If not, it can cause damage, failure or bodily injury from falling cargo due to hoisting failure, or by being caught between suspended cargo and other material.
Avoid moisture	**Danger of electric shock** Install in an area which is not exposed to moisture such as rain or steam. If moisture comes into and tact with the electric source connection, it can cause fire or bodily injury due to short-circuit or electric shock.
Install at a safe site	**Danger of explosion, fire and accident** Install in an area free from explosive, flammable or corrosive substances. If not, it can cause explosion, fire or accident.
Ask qualified electrician	**Danger of short-circuit and electric shock** Ask a qualified electrician to perform electric wiring. If not, short-circuit or electric shock can cause fire or bodily injury.
Turn off electric source	**Danger of electric shock and entanglement** Be sure to turn off electric source on building site before wiring. If not, it can cause electric shock or bodily injury due to turning objects.
Install overcurrent protective device	**Danger of accident, fire and failure** Be sure to install protective device to protect circuitry. We recommend overcurrent protective device (rated 15A for ISP-250C and rated 15A for ISP-500C (rated 20A 100/115V/1phase)) to protect branch circuit. If equipment is not stopped in an emergency, it can cause accident, fire or failure.
Install emergency stop switch	**Danger of accident, fire or failure** Be sure to install an electric source emergency stop switch (or protective device that can urgently stop). If equipment is not stopped in an emergency, it can cause accident, fire or failure.
Install short circuit protective device	**Danger of fire and electric shock** Install short circuit protective device. If not, it can cause bodily injury due to fire or electric shock.
Install motor protective circuit breaker to protect motor	**Danger of electric fire and electric shock** Install motor protective circuit breaker to protect motor. If not, it can cause bodily injury due to electric fire or electric shock. If you have any questions about the selection of protective devices, contact either the dealer who sold it to you or us.
Be careful about wiring	**Danger of short-circuit and electric shock** We recommend an electric source cable of more than 2mm^2 (more than rated 10A/1phase, 7A/3phase for ISP-250C and more than rated 18A/1phase, 15A/3phase for ISP-500C) cross section area for electric source cable and ground cable. Be careful to avoid voltage drop considering local situation. If not, it can cause a short-circuit fire and may result in bodily injury from electric shock.

For safe operation

⚠ WARNING

Use crimp-style terminal	**Danger of short-circuit and electric shock** Fit firmly proper round type crimp-style terminal to electric source cable using crimp tool and connect to motor terminal section. If not, it can cause short-circuit fire or bodily injury from electric shock due to looseness or disconnection.
Protect cable from being pulled	**Danger of short-circuit and electric shock** Be sure to fit cable-gland to hole of ϕ20mm at motor terminal box. If not, it can cause short-circuit fire or bodily injury from electric shock.
Be sure to ground	**Danger of electric shock** Connect ground cable to ground terminal in motor terminal box. If not, it can cause bodily injury from electric shock.
Never evacuate hazardous gas	**Danger of explosion and ignition** Do not evacuate gas which is hazardous to humans or explosive, flammable, or corrosive. Do not evacuate with substances containing chemicals, solvents, and powders. If done, it can cause failure or bodily injury by gas, explosion or ignition.
Avoid foreign matter	**Danger of entanglement and foreign matter dispersal** Never put finger or foreign matter into air hole of fan cover, air hole of motor or clearance between FS(1) and FS(2) cooling fins. If done, it can cause bodily injury from entanglement with turning section, or foreign matter dispersal.
Never alter	**Danger of electric shock and entanglement** Do not remove or alter safeguards or insulation parts. If done, it can cause bodily injury from electric shock or turning section and it can cause deteriorated performance and operating lifetime, and invalidate guarantee.
Change after vacuum pump is stopped	**Danger of failure and bodily injury** Change air-flush port only after vacuum pump is stopped. If you change it during vacuum pump operation, it can cause vacuum pump failure and bodily injury.
Conduct periodical maintenance and inspection	**Danger of failure and bodily injury** Conduct periodical maintenance and inspection. If not, it can cause insufficient performance, failure of vacuum pump, and bodily injury.
Be careful about high temperature	**Danger of burns** Conduct maintenance and inspection only after vacuum pump becomes cool enough. Maintenance and inspection soon after vacuum pump stops can cause burn injury.
Turn off electric source	**Danger of electric shock** Be sure to conduct maintenance and inspection after you turn off electric source. If not, it can cause bodily injury from electric shock or turning object.
Ask specialist to perform repairs	**Danger of accident, failure and shorter operating lifetime** Ask specialist to perform repairs. Defective repairs can cause accident, failure or shorter operating lifetime.
With a thermal protector [Only single-phase motor]	**Danger of restart** Be sure to switch off electric source before maintenance or inspection. Single-phase motor has a thermal protector. Vacuum pump restarts become cool without warning after vacuum pump.

For safe operation

⚠ CAUTION

Use at designated temperature	**Danger of overheating** Operate at ambient temperature of 5℃～40℃. Operating at a temperature range other than that designated can cause accident, failure or bodily injury such as burns due to overheating.
Pay attention to ventilation	**Danger of overheating** Install in a well-ventilated area. Poor ventilation can disrupt cooling and cause accident, failure or bodily injury such as burns since this vacuum pump is an air-cooled type.
Avoid dust	**Danger of dust** Be sure site is free from dust. Sucking in of dust can cause failure.
Install on a solid, level floor	**Danger of unbalance** Be sure to install on solid and level floor (less than 5° inclination). Uneven installation can cause failure and movement of vacuum pump. If installation floor is unstable, fix pump base with 4-φ11 holes of pump leg (ISP-250C) or 4-M10 tap section pump base (ISP-500C).
Avoid direct sunlight	**Danger of overheating** Install where equipment is not exposed to direct sunlight. Vacuum pump exposed to direct sunlight can overheat, resulting in failure.
Check voltage	**Motor burnout** Before doing any wiring, check electric source and voltage. Single-phase is a multi voltage type of AC100V/AC200V. Three-phase is a multi voltage type of AC200V/AC400V. Voltage can be changed at terminal block. This pump is wired to 200V when delivered to you. Check your electric source, voltage, and wire correctly to terminal block. Improper wiring and incorrect voltage can cause motor burnout.
Inspect cause of problem	**Danger of problem recurrence and failure** If protective device or thermal protector activates, be sure to turn off electric source and inspect causes to solve the problem. Do not operate until problem is solved. Operation while problem is left unsolved can cause problem recurrence and failure.
Remove blank flange	**Danger of exhaust disruption** Remove blank flange from inlet and outlet. Operation with blank flange being fitted can disrupt exhaust or cause blank flange to fly by exhaust impetus, resulting in accident, failure, or bodily injury from contact with flying objects.
Prevent foreign matter from entering	**Danger of foreign matter entering inlet** When checking turning direction, be careful not to enter foreign matter into an inlet. Foreign matter entering inlet can cause failure.
Pay attention to exhaust resistance	**Danger of exhaust disruption** When connecting exhaust piping to vacuum pump and when combining piping with another vacuum pump, pay attention to piping size and length so that it does not cause exhaust resistance. Exhaust resistance can disrupt air flow, resulting in failure and over-current.
Start or stop after closing isolation valve	**Danger of vacuum break and pollution** Be sure to close isolation valve between vacuum pump and vacuum system (chamber) during startup and stop. Start-up or stop with isolation valve in the open position can draw back gas and debris attached to inside of pump to vacuum chamber due to pressure differential, resulting in vacuum break and pollution on vacuum chamber side.
Open air inlet	**Danger of abnormal sound and failure** Open inlet to atmosphere for about 5 seconds before restarting vacuum pump. If not, it can unbalance temperature inside vacuum pump, resulting in failure.

For safe operation

⚠ CAUTION

Beware temperature of intake gas	**Danger of exceeding permissible temperature of intake gas** If intake gas temperature is over 50℃, be sure to install a chiller or trap between vacuum pump and vacuum chamber so that gas intake temperature of vacuum pump keeps below 50℃. If not, vacuum pump temperature can increase, resulting in failure.
Caution after exhausting vapor	**Danger of insufficient vapor exhaust** After evacuating vapor, do air-flush operation for at least one hour. If you close air-flush port or stop vacuum pump soon after evacuating vapor, condensed water will remain inside vacuum pump which will cause failure.
Beware of intake gas volume	**Danger of exceeding permissible intake gas volume** When sending N_2 gas or dry air into air-flush port, pressure should be the same as atmospheric pressure and flow rate should be less than 10NL/min. If not, it can increase pressure inside vacuum pump, resulting in failure.
Operate while opening air-flush port	**Danger of remaining moisture** When evacuating moisture, be sure to open air-flush port (air-flush operation). If you evacuate vapor while air-flush port is closed, condensed moisture will remain inside vacuum pump and cause failure.

Where to attach warning stickers

Where to attach warning stickers

Always keep warning stickers clean and legible. If they become dirty or detached, replace them with new ones. If you need replacement stickers, contact the dealer who sold the vacuum pump to you.

ISP-250C
Single-phase

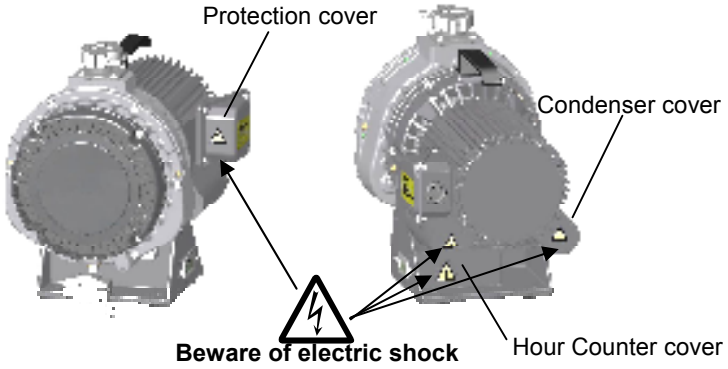

ISP-250C
Three-phase

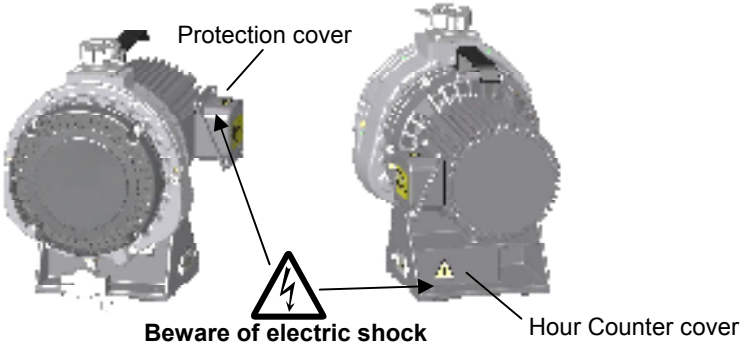

ISP-500C
Single-phase

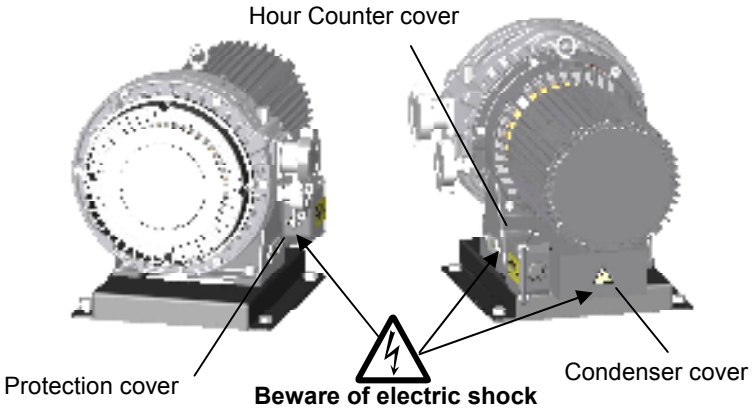

ISP-500C
Three-phase

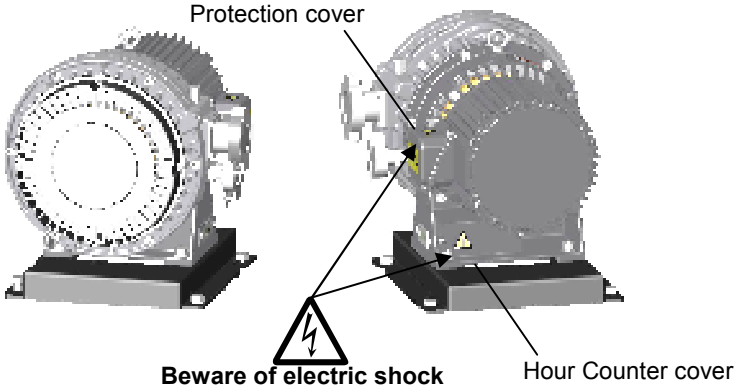

Contents

Important information 1
For safe operation 2
Contents 7
1. Before use 8
1.1 Check the product 8
2. Name and structure of each section 11
3. Installation 12
3.1 Wiring 13
3.2 Test operation 17
3.3 Connection to vacuum system (chamber) 18
4. Operation 19
4.1 Standard operation 21
4.1.1 Start-up 21
4.1.2 Shut-down 21
4.2 Air-flush operation 22
4.2.1 Preparation 22
4.2.2 Startup and shut-down 23
4.2.3 When returning to standard operation 23
5. Maintenance and inspection 25
5.1 Daily maintenance and inspection 25
5.2 Maintenance 26
6. Problems and remedies 27
7. Disposal 27
8. Specifications 28
8.1 Specifications 28
8.1.1 ISP-250C 28
8.1.2 ISP-500C 29
8.2 Dimensions 30
8.2.1 ISP-250C 30
8.2.2 ISP-500C 30
8.3 Performance data 31

1. Before use

1.1 Check the product

- **Check that the package is right-side-up before opening.**
- **Check that the model of the product is the same as the one you ordered.**

How to read model name

ISP : model

I S P – 2 5 0 C – S V
I S P – 5 0 0 C – T H

Displacement (swept volume)
250C : 250 L/min at 50Hz Motor
500C : 500 L/min at 50Hz Motor

Motor
S : Single phase
T : Three phase

Inlet direction
H : horizontal
V : vertical

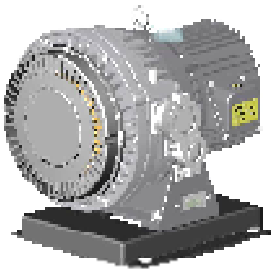

ＩＳＰ－５００Ｃ－ＴＨ

ＩＳＰ－５００Ｃ－ＴＶ

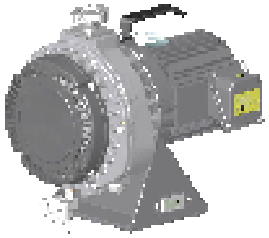

ＩＳＰ－２５０Ｃ－ＴＶ

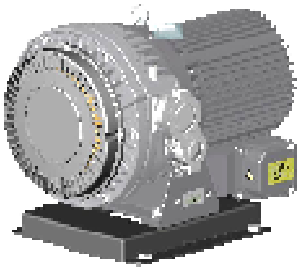

ＩＳＰ－５００Ｃ－ＳＨ

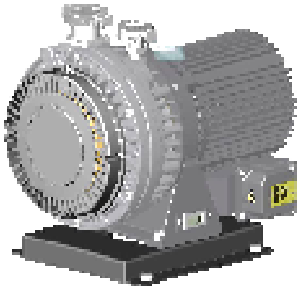

ＩＳＰ－５００Ｃ－ＳＶ

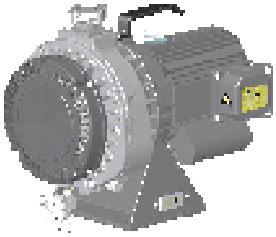

ＩＳＰ－２５０Ｃ－ＳＶ

- **Check that there is no damage.**
  If there is any damage, contact either the dealer who sold it to you or us.
- **Check the following accessories.**
  Instruction manual (this one)
  Air-muffler for air-flush
  (ISP-250C is attached to handle of motor. ISP-500C is attached to eyebolt of motor.)

・ISP-250C

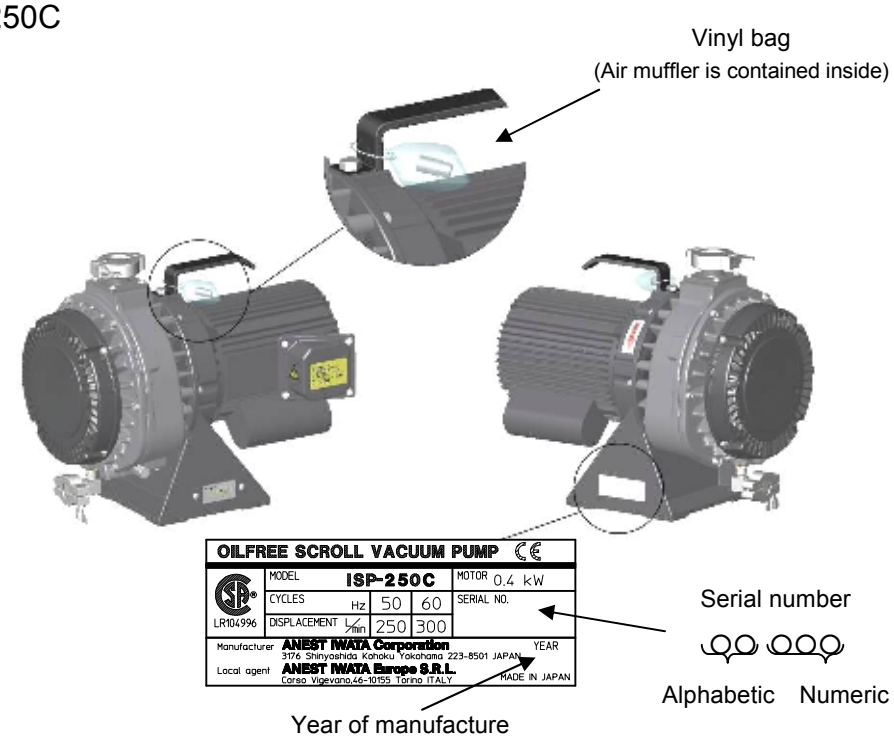

・ISP-500C

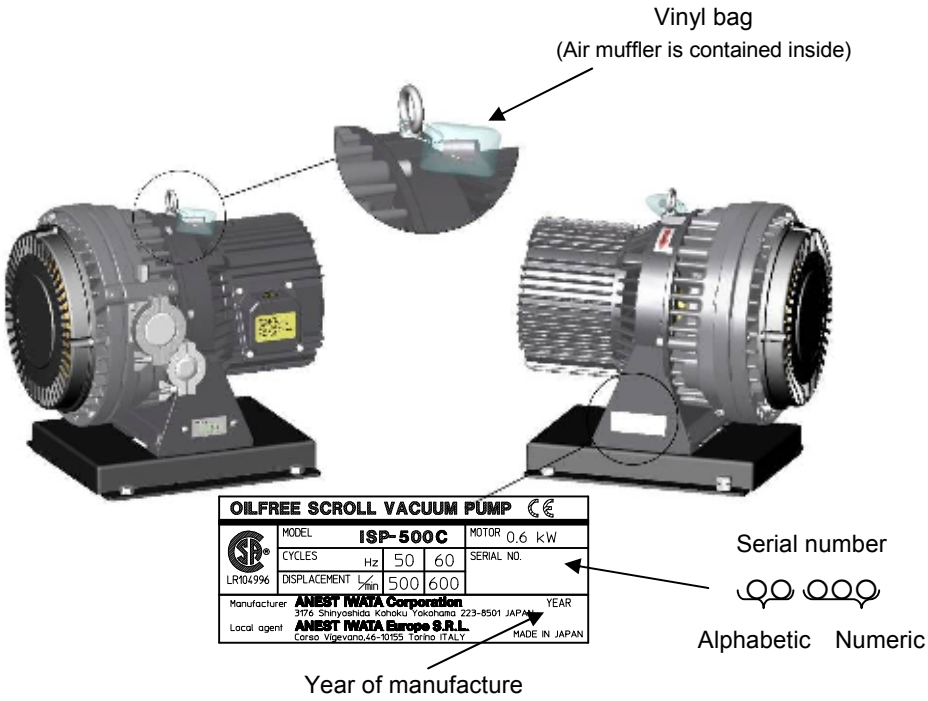

※Please prepare electric source cords, crimp-style terminal, protective devices, piping to inlet, and piping from outlet on customer side.

Open package

⚠ WARNING	
Danger of cargo collapse **Be careful to install vacuum pump using motor handle (ISP-250C mass 25kgs/1-phase, 23kgs/3-phase), or using motor eyebolt and crane with sufficient allowable load capacity (ISP-500C mass 44kgs/1-phase, 38kgs/3-phase) while paying attention to stability of suspended load.** If not, it can cause damage, failure or bodily injury from falling cargo due to hoisting failure, or by being caught between suspended cargo and other material.	**Be careful about lifting**

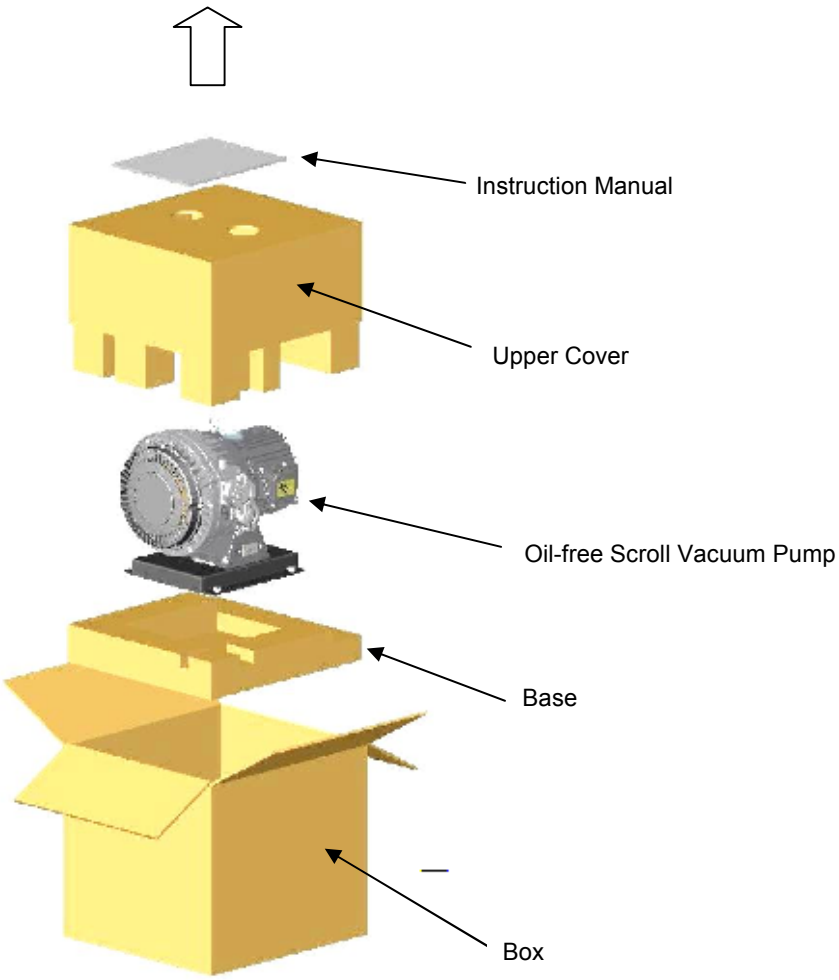

2. Name and structure of each section

・ISP-250C

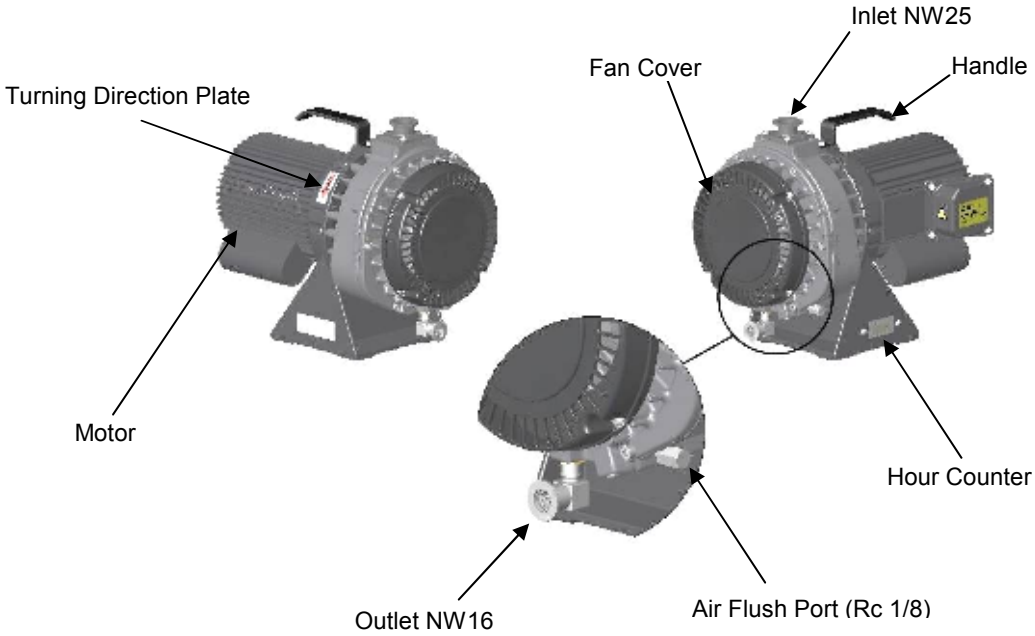

・ISP-500C

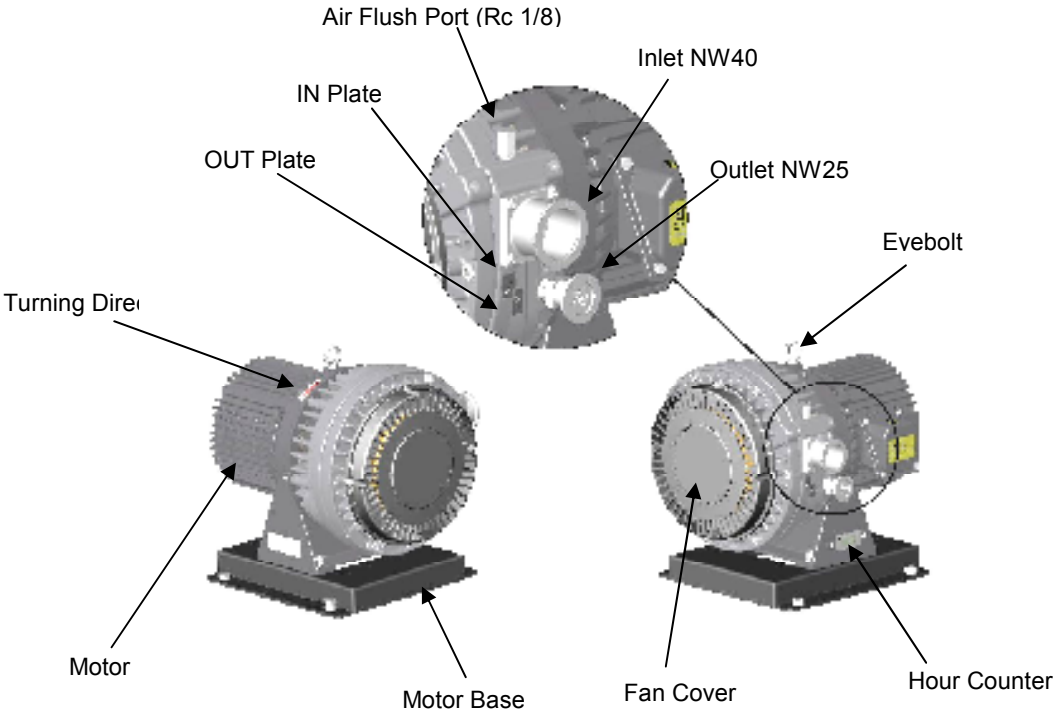

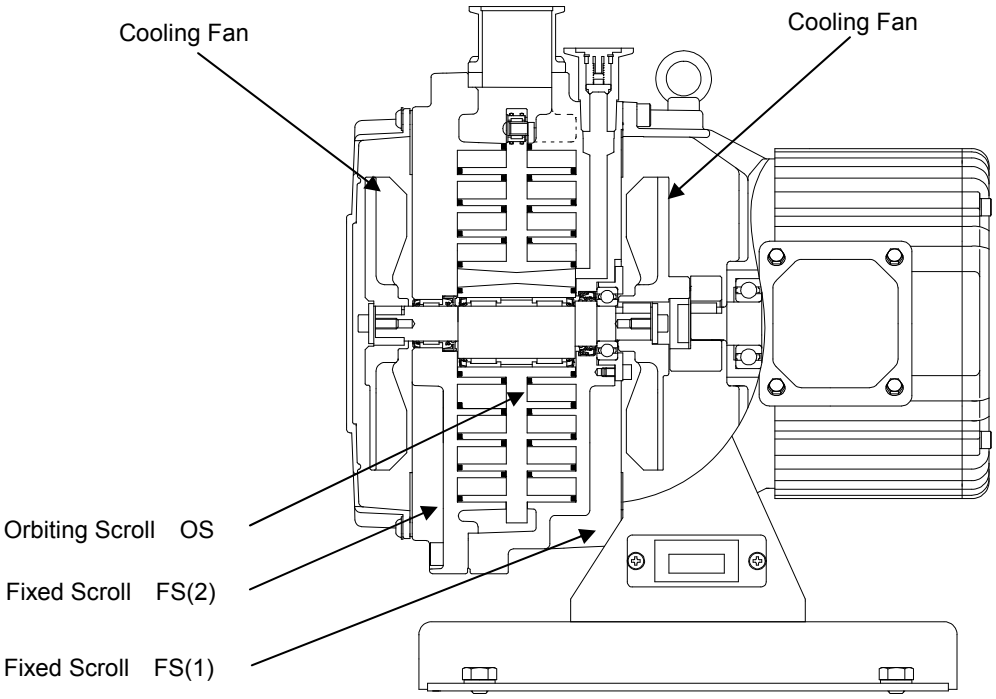

Structure of vacuum pump

3. Installation

⚠ **WARNING**	
Danger of electric shock **Install in an area which is not exposed to moisture such as rain or steam.** If moisture comes into and tact with the electric source connection, it can cause fire or bodily injury due to short-circuit or electric shock.	**Avoid moisture**
Danger of explosion, fire or accident **Install in an area free from explosive, flammable or corrosive substances.** If not, it can cause explosion, fire or accident.	**Install at a safe site**
⚠ **CAUTION**	
Danger of overheating **Operate at ambient temperature of 5℃～40℃.** Operating at a temperature range other than that designated can cause accident, failure or bodily injury such as burns due to overheating.	**Use at designated temperature**
Danger of overheating **Install in a well-ventilated area (refer to below chart).** Poor ventilation can disrupt cooling and cause accident, failure or bodily injury such as burns since this vacuum pump is an air-cooled type.	**Pay attention to ventilation**

Necessary ventilated air volume	
ISP-250C	ISP-500C
Over 4 m^3/min	Over 8 m^3/min

Danger of dust **Be sure site is free from dust.** Sucking in of dust can cause failure.	**Avoid dust**
Danger of unbalance **Be sure to install on solid and level floor (less than 5° inclination).** Uneven installation can cause failure and movement of vacuum pump. If installation floor is unstable, fix pump base with 4-ϕ11 holes of pump leg (ISP-250C) or 4-M10 tap section pump base (ISP-500C). 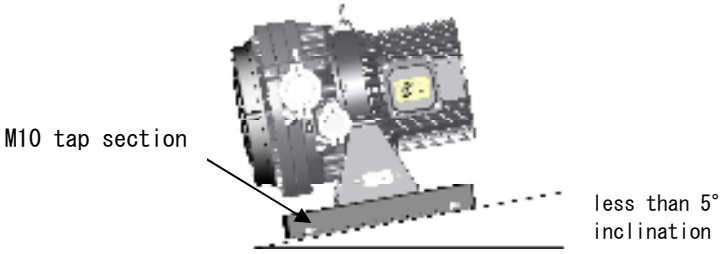 	**Install on a solid, level floor**
Danger of overheating **Install where equipment is not exposed to direct sunlight.** Vacuum pump exposed to direct sunlight can overheat, resulting in failure.	**Avoid direct sunlight**
Important	
When building vacuum pump into vacuum system, pay attention to space for maintenance, ambient temperature and piping. If you have any questions, contact the dealer who sold it to you or us.	

3.1 Wiring

⚠ **WARNING**	
Danger of short-circuit and electric shock **Ask a qualified electrician to perform electric wiring.** If not, short-circuit or electric shock can cause fire or bodily injury.	**Ask qualified electrician**
Danger of electric shock and entanglement **Be sure to turn off electric source on building site before wiring.** If not, it can cause electric shock or bodily injury due to turning objects.	**Turn off electric source**
Danger of accident, fire and failure **Be sure to install protective device to protect circuitry. We recommend overcurrent protective device (rated 15A for ISP-250C and rated 15A for ISP-500C (rated 20A 100/115V/1phase)) to protect branch circuit.** If equipment is not stopped in an emergency, it can cause accident, fire or failure.	**Install overcurrent protective device**
Danger of accident, fire or failure **Be sure to install an electric source emergency stop switch (or protective device that can urgently stop).** If equipment is not stopped in an emergency, it can cause accident, fire or failure.	**Install emergency stop switch**
Danger of fire and electric shock **Install short circuit protective device.** If not, it can cause bodily injury due to fire or electric shock.	**Install short circuit protective device**

Danger of electric fire and electric shock (refer to chart 1 on page 15) **Install motor protective circuit breaker to protect motor.** If not, bodily injury due to electric fire or electric shock can result. If you have any questions about the selection of protective devices, contact either the dealer who sold it to you or us.	**Install motor protective circuit breaker to protect motor**
Danger of short-circuit and electric shock **We recommend an electric source cable of more than 2mm^2 (more than rated 10A/1phase, 7A/3phase for ISP-250C and more than rated 18A/1phase, 15A/3phase for ISP-500C) cross section area for electric source cable and ground cable.** **Be careful to avoid voltage drop considering local situation.** If not, it can cause a short-circuit fire and may result in bodily injury from electric shock.	**Be careful about wiring**
Danger of short-circuit and electric shock **Fit firmly proper round type crimp-style terminal to electric source cable using crimp tool and connect to motor terminal section.** If not, it can cause short-circuit fire or bodily injury from electric shock due to looseness or disconnection.	**Use crimp-style terminal**
Danger of short-circuit and electric shock **Be sure to fit cable-gland to hole of ϕ 20mm at motor terminal box.** If not, it can cause short-circuit fire or bodily injury from electric shock.	**Protect cable from being pulled**
Danger of electric shock **Connect ground cable to ground terminal in motor terminal box.** If not, it can cause bodily injury from electric shock.	**Be sure to ground**
Danger of restart **Be sure to switch off electric source before maintenance or inspection.** **Single-phase motor has a thermal protector.**. Vacuum pump restarts become cool without warning after vacuum pump.	**With a thermal protector [Only single-phase motor]**

CSA Requirement

3 phase motor not protected－external protection in accordance with CE code, part 1, must be provided.

Min. circuit ampacity of conductor is
ISP-250C－1phase 10A /3phase 7A、ISP-500C－1phase 18A /3phase 15A

Max. branch circuit breaker is
ISP-250C－15A、ISP-500C－15A (1phase 100/115V is 20A)

When you used this pump in Europe.

This vacuum pump must be equipped with a main disconnect device in accordance with requirements of EN60204-1, clause 5.3.2. It is recommended to use a circuit breaker as main breaker which is suitable for isolation according to EN60947-2 and is equipped with an operating handle which is lockable in OFF position and complies with the other requirements of EN60204-1, clause 5.3.

⚠ CAUTION

Motor burnout **Before doing any wiring, check electric source and voltage.** **Single-phase is a multi voltage type of AC100V/AC200V. Three-phase is a multi voltage type of AC200V/AC400V.** **Voltage can be changed at terminal block.** **This pump is wired to 200V when delivered to you.** **Check your electric source, voltage, and wire correctly to terminal block.** Improper wiring and incorrect voltage can cause motor burnout.	**Check voltage**

Danger of problem recurrence and failure	
If protective device or thermal protector activates, be sure to turn off electric source and inspect causes to solve the problem. **Do not operate until problem is solved.** Operation while problem is left unsolved can cause problem recurrence and failure.	**Inspect cause of problem**

This shows three-phase 200V connection for ISP-500C.

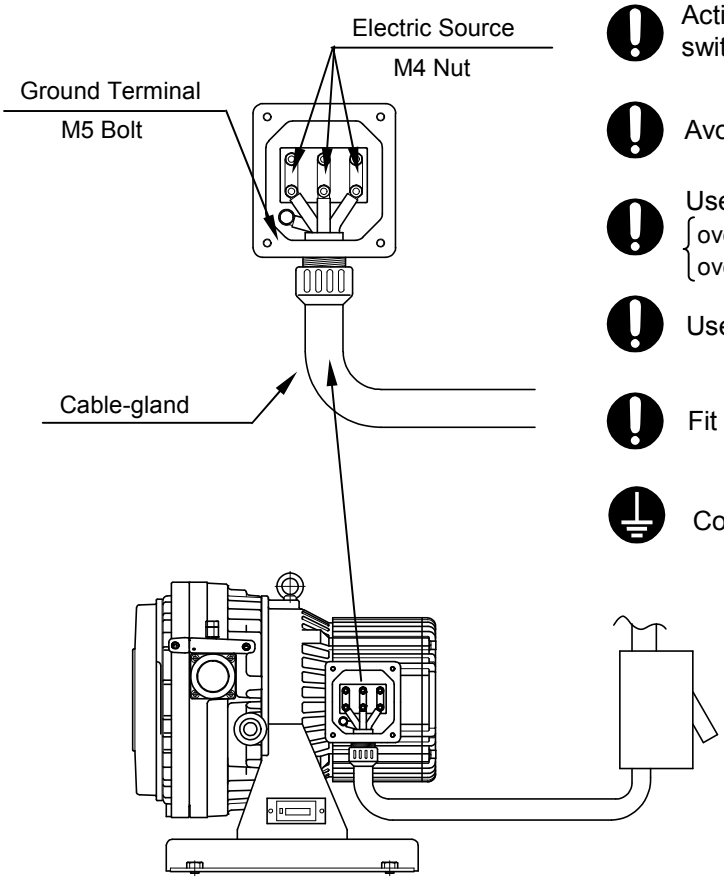

Activate the emergency stop by electric source switch or protective device.

Avoid motor burnout by protective device (chart 1).

Use rated electric source cable and ground cable.
{over rated 10A/1-phase, 7A/3-phase for ISP-250C
over rated 18A/1-phase, 15A/3-phase for ISP-500C}

Use round type terminal.

Fit cable-gland.

Connect ground cord to ground terminal.

Chart-1

Single-phase specifications				Three-phase specifications			
Voltage V	Frequency Hz	Recommended protective device (or breaker) capacity A		Voltage V	Frequency Hz	Recommended protective device (or breaker) capacity A	
		ISP-250C	ISP-500C			ISP-250C	ISP-500C
100	50	6.0	10.7	200	50	1.8	3.1
100	60	6.0	12.5	200	60	2.2	3.2
115	60	5.4	10.8	208	60	2.2	3.0
200	50	3.0	5.4	230	60	2.2	2.9
200	60	3.2	6.0	380	50	1.1	1.8
230	50	2.7	4.9	400	50	1.1	1.8
230	60	2.7	5.0	415	50	1.2	1.9
				460	60	1.2	1.7

How to wire

① Remove 4pcs. of M5 bolt at motor terminal box and remove protection cover.
※Be careful not to lose removed M5 bolts and washer.
② Wiring diagram is shown inside protection cover.

Single-phase specifications

You can change to a 100V or 200V connection by changing terminal plate (2pcs.).
※It is wired to 200V when delivered to you.
If you want to change to a 100V connection, remove M4 nut of electric source terminal and change terminal plate as illustrated below.
Insert electric source cord through cable-gland on the right side of terminal box.

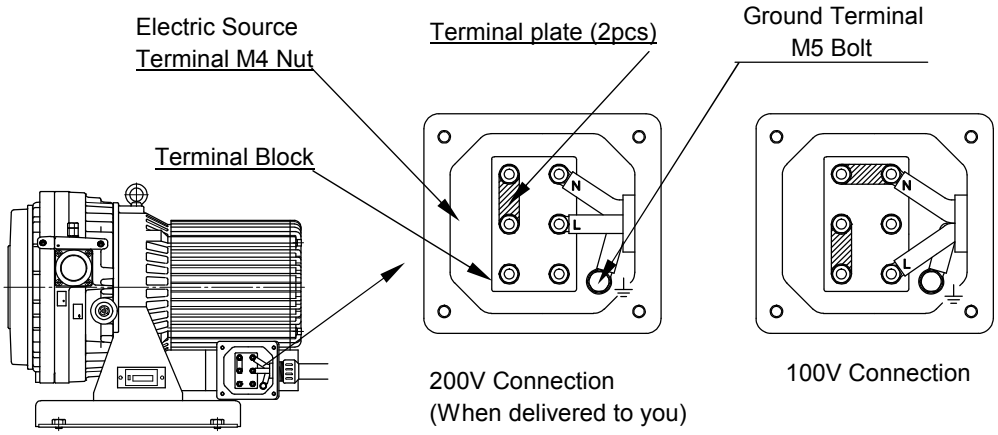

Three-phase specifications

You can change to a 200V or 400V connection by changing terminal plate (3pcs.).
※It is wired to 200V when delivered to you.
If you want to change to a 400V connection, remove M4 nut of electric source terminal and change terminal plate as illustrated below.
Insert electric source cord through cable-gland on the bottom side of terminal box.
Connect each phase L1-L2-L3 to each electric source terminal respectively in accordance with the below wiring diagram.

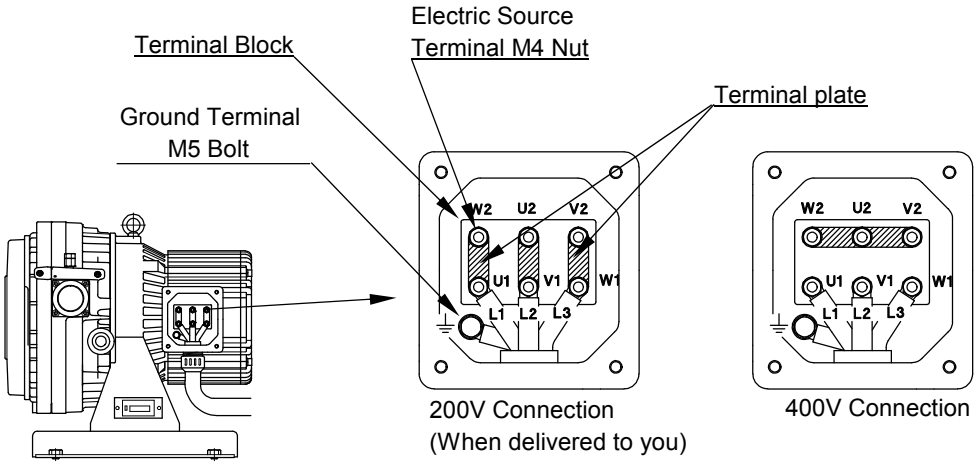

3.2 Test operation

⚠ CAUTION	
Danger of exhaust disruption **Remove blank flange from inlet and outlet.** Operation with blank flange being fitted can disrupt air flow or cause blank flange to fly by exhaust impetus, resulting in accident, failure, or bodily injury from contact with flying objects.	**Remove blank flange**
Danger of foreign matter entering inlet **When checking turning direction, be careful not to enter foreign matter into an inlet. Foreign matter entering inlet can cause failure.**	**Prevent foreign matter from entering**

Test operation

①Open inlet and outlet
Remove blank flanges (2 places) from inlet and outlet of vacuum pump.

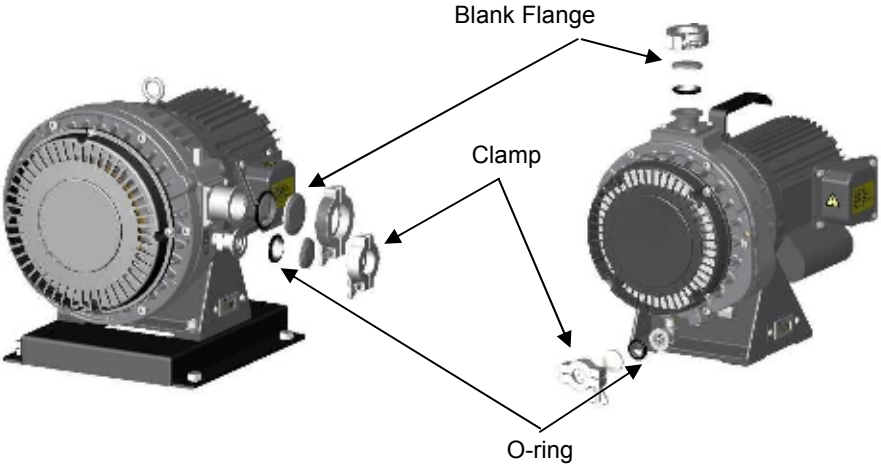

②Check turning direction
Open inlet, turn on electrical source to start operating vacuum pump.
Vacuum pump turns clockwise when viewed from motor side.

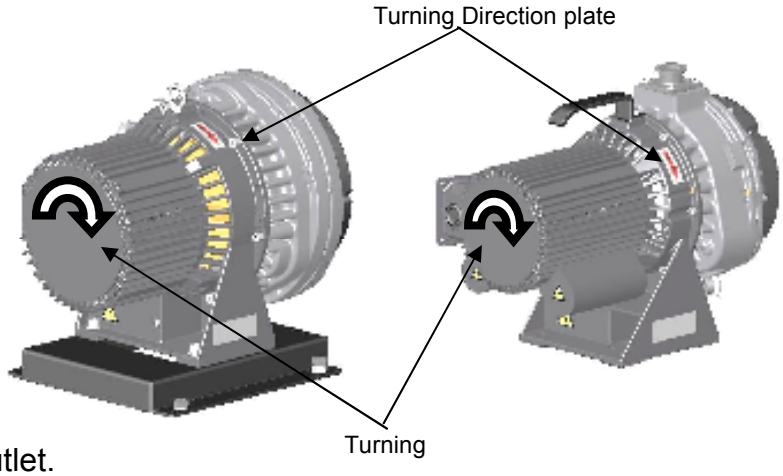

Check that comes out of air outlet.
If air does not come out from outlet, vacuum pump of three-phase motor may turn in reverse.
In that case, stop vacuum pump, turn off main electrical source and change 2 out of 3 wires of electric source connection and change turning direction to correct one.
If you fit pump to vacuum system and control operation of vacuum pump by

remote control, **first check pump itself for turning direction** and then fit it to vacuum system.

Important

Vacuum pump turns clockwise when viewed from motor side.

If pump turns counter-clockwise, stop vacuum pump, turn off electrical source and change 2 out of 3 wires of electrical source connection.

3.3 Connection to vacuum system (chamber)

・Inlet of ISP-250C is NW25 and outlet is NW16.
・Inlet of ISP-500C is NW40 and outlet is NW25.

CAUTION

Danger of exhaust disruption

When connecting exhaust piping to vacuum pump and when combining piping with another vacuum pump, pay attention to piping size and length so that it does not cause exhaust resistance.
Exhaust resistance can disrupt air flow, resulting in failure and over-current.

Pay attention to exhaust resistance

Important

Use isolation valve between vacuum system and inlet.
Isolation valve is necessary to prevent the drawback of debris attached to the inside of vacuum pump into the vacuum chamber during start-up and shut-down. (We recommend the use of leak valve also). We recommend the use of an **automatic valve as the isolation valve which closes during power failure in order to prevent the drawback of debris inside pump into the vacuum chamber during power failure.**

Use the clean connecting pipe between vacuum chamber and vacuum pump.
We recommend the use of a flexible tube between inlet of vacuum pump and vacuum chamber so that vibration of pump does not transmit to vacuum chamber.

When connecting exhaust piping to outlet of vacuum pump, refer to the following size and length.
・It is recommended in the case of ISP-250C, max. **5m** direct pipe length for exhaust pipe size **NW16 (inner dia.16)**
・It is recommended in the case of ISP-500C, max. **15m** direct pipe length for exhaust pipe size **NW25 (inner dia.25)**
But if pipe length becomes longer, use a larger size exhaust pipe.

Make sure that exhaust piping is not clogged during pump operation.
Make sure that pressure at outlet does not exceed atmospheric pressure at any conditions.

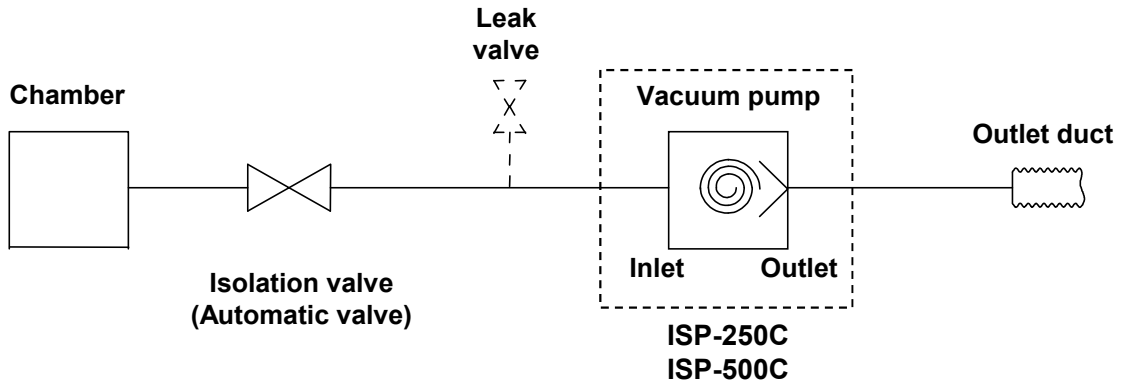

4. Operation

Be sure to use the procedure below to start up or shut down the pump.

- When you do not use air-flush device,
  proceed 4.1 Standard operation [page 21].
- When you use air-flush device,
  proceed 4.2 Air-flush operation [page 22].

⚠ WARNING

Danger of explosion and ignition

Do not evacuate gas which is hazardous to humans or explosive, flammable, or corrosive. Do not evacuate with substances containing chemicals, solvents, and powders.
If done, it can cause failure or bodily injury by gas, explosion or ignition.

Do not pump

- Toxic gas
- Explosive gas
- Flammable gas
- Corrosive gas
- Chemicals
- Solvent
- Powder
- Water
- Liquid

※When evacuating vapor, operate in accordance with 4.2 [page 22].

Never evacuate hazardous gas

Danger of entanglement and foreign matter dispersal

Never put finger or foreign matter into air hole of fan cover, air hole of motor or clearance between FS(1) and FS(2) cooling fins.
If done, it can cause bodily injury from entanglement with turning section, or foreign matter dispersal.

Finger, foreign matter

Finger, foreign matter

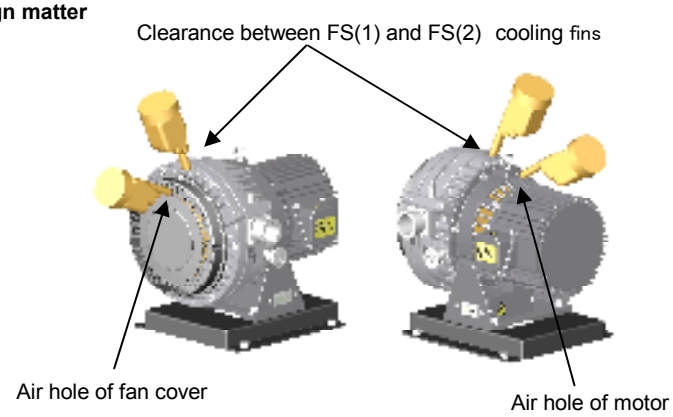

Avoid foreign matter

Danger of electric shock and entanglement

Do not remove or alter safeguards or insulation parts.
If done, it can cause bodily injury from electric shock or turning section and it can cause deteriorated performance and operating lifetime, and invalidate guarantee.

Never alter

Danger of failure and bodily injury

Change air-flush port only after vacuum pump is stopped.
If you change it during vacuum pump operation, it can cause vacuum pump failure and bodily injury.

Change after vacuum pump is stopped

⚠ CAUTION	
Danger of exhaust disruption **Remove blank flange from inlet and outlet.** Operation with blank flange being fitted can disrupt exhaust or cause blank flange to fly by exhaust impetus, resulting in accident, failure, or bodily injury from contact with flying objects.	**Remove blank flange**
Danger of vacuum break and pollution **Be sure to close isolation valve between vacuum pump and vacuum system (chamber) during start-up and stop.** Start-up or stop with isolation valve in the open position can draw back gas and debris attached to inside of pump to vacuum chamber due to pressure differential, resulting in vacuum break and pollution on vacuum chamber side.	**Start or stop after closing isolation valve**
Danger of abnormal sound and failure **Open inlet to atmosphere for about 5 seconds before restarting vacuum pump.** If not, it can unbalance temperature inside vacuum pump, resulting in failure.	**Open air inlet**
Danger of exceeding permissible temperature of intake gas **If intake gas temperature is over 50℃, be sure to install a chiller or trap between vacuum pump and vacuum chamber so that gas intake temperature of vacuum pump keeps below 50℃.** If not, vacuum pump temperature can increase, resulting in failure.	**Beware temperature of intake gas**
Danger of remaining moisture **When evacuating moisture, be sure to open air-flush port (air-flush operation).** If you evacuate vapor while air-flush port is closed, condensed water will remain inside vacuum pump and cause failure.	**Operate while opening air-flush port**
Danger of insufficient vapor exhaust **After evacuating vapor, do air-flush operation for at least one hour.** If you close air-flush port or stop vacuum pump soon after evacuating vapor, condensed water will remain inside vacuum pump which will cause failure.	**Caution after exhausting vapor**
Danger of exceeding permissible intake gas volume **When sending N_2 gas or dry air into air-flush port, pressure should be the same as atmospheric pressure and flow rate should be less than 10NL/min.** If not, it can increase pressure inside vacuum pump, resulting in failure.	**Beware of intake gas volume**

Important

If it takes time to reach ultimate pressure of pump during initial operation (also operation after pump has not been used for a long time),
Close inlet, and continue operation for 6～8 hours while opening inlet for 3～5 seconds to atmosphere 2～3 times per hour. During pump stoppage, moisture might have entered inside of pump and deteriorated performance to reach ultimate pressure.

If pump has evacuated liquid such as water or high humid air (over 60%RH),
Moisture can deposit inside pump and cause pump failure. In that case, close isolation valve, and open inlet to atmosphere for 3～5 seconds several times and exhaust moisture inside pump to outside.

If pump has continued operation around ultimate pressure or continuously evacuated high humid gas
Moisture can be condensed and remains inside pump, causing insufficient ultimate pressure and failure.
In that case, do air-flush operation in accordance with 4.2 [page 22].

4.1 Standard operation

4.1.1 Start-up

① Check that blank flange of outlet is removed.

② Close isolation valve in order to prevent the drawback of debris attached to the inside of vacuum pump into vacuum chamber due to pressure differential, resulting in vacuum break and pollution.
(Open leak valve if you use leak valve).

③ Turn on vacuum pump.

④ Check start-up of vacuum pump and open isolation valve (close leak valve soon after start-up if you use leak valve) and evacuate vacuum chamber.

Important

When continuously operating pump at around ultimate pressure (for example, using as fore line pump of turbo molecular pump) ,
It can cause foreign matter or moisture to deposit inside pump, resulting in failure.
In that case, do air-flush operation or close isolation valve and open inlet to atmosphere for 3～5 seconds, 3～5 times daily.
Be careful not to damage air-flush port (especially air-muffler section).
If not, it can cause failure.
When doing air-flush operation,
Noise level will increase (by 7～8dB).
Install pump in an area which is not exposed to debris such as iron powder, stone powder, polish powder or wood dust.
Debris can clog air-muffler, undercutting air-flush effect.

4.1.2 Shut-down

① Be sure to close isolation valve in order to prevent the drawback of debris attached to inside of vacuum pump into vacuum chamber during operation due to pressure differential (open leak valve if you use leak valve).

② Turn off vacuum pump.

③ Check shut-down of vacuum pump.

Important

Be sure to close isolation valve between vacuum pump and vacuum chamber during pump shut-down.
If vacuum pump stops during air-flush operation, atmospheric air is drawn back from air-flush port to inside of vacuum pump, and vacuum on chamber side cannot be maintained. Be sure to close isolation valve between vacuum pump and vacuum chamber to prevent the drawback of debris from vacuum pump into vacuum chamber before stopping vacuum pump.
When returning air-flush operation to standard operation, operate as per 4.2.3[page 23].

4.2 Air-flush operation

This pump is equipped with air-flush port. Before evacuating vapor, read precautions below completely and be sure to understand the contents.

Purpose of air-flush

Evacuating moisture or humid gas by vacuum pump can cause condensed water to remain in pump. This remaining water can cause failure of ultimate pressure or pump. Air-flush operation is necessary to exhaust the remaining water inside. Air-flush operation does not only exhaust moisture but also restores ultimate pressure.

※Vapor disposal volume is max. 25g/day, when doing air-flush operation(ambient temperature25℃, humidity 60%RH).

Important

Maintenance interval of this pump is based on clean gas applications The standard differs when evacuating vapor.

You must shorten maintenance interval (5.2[page 26]) when evacuating vapor since vapor temperature, disposal volume, disposal frequency and substances in vapor have an influence on pump operation. When evacuating vapor, pay attention to all WARNING, CAUTION and Important notes (4 [page 19]).

4.2.1 Preparation

Before starting air-flush operation, first stop vacuum pump and proceed in accordance with the following procedure. Never try to do air-flush operation during operation.

Fit air-muffler

① Stop vacuum pump.
② Remove plug from air-flush port with a spanner (nominal dia. 13mm).
③ Lightly fit the attached air-muffler to air-flush port.
※Store the removed plug and do not misplace it.

ISP-250C

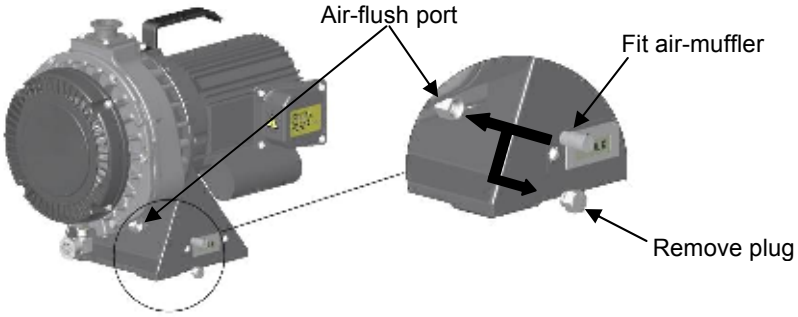

ISP-500C

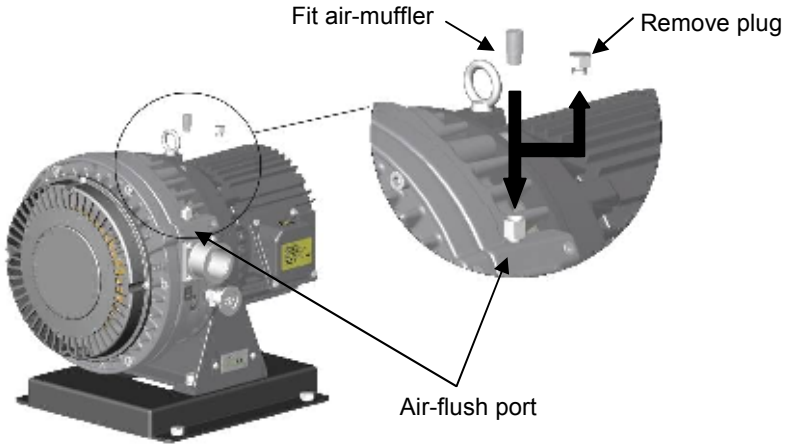

4.2.2 Start-up and shut-down

① Start vacuum pump according to 4.1.1 Operation [page 21].
② Stop vacuum pump according to 4.1.2 Shut-down[page 21].

Important

Continuous evacuating of humid gas
When evacuating vacuum chamber while humidity in chamber is high, moisture volume drawn into pump differs according to temperature and pressure in chamber.
When pumping vacuum chamber containing humid gas, be sure to open air-flush port and operate pump (air-flush operation).
Be careful not to damage air-flush port (especially air-muffler section) .
Damage to air-flush port can cause failure.
When doing air-flush operation
Noise level will increase (by 7～8dB).
Install pump in an area which is not exposed to debris such as iron powder, stone powder, polish powder or wood dust.
Debris can clog air-muffler, undercutting air-flush effect.
Be sure to close isolation valve between vacuum pump and vacuum chamber during pump shut-down.
If vacuum pump stops during air-flush operation, atmospheric air is drawn back from air-flush port to inside of vacuum pump, and vacuum on chamber side cannot be maintained. Be sure to close isolation valve between vacuum pump and vacuum chamber to prevent the drawback of debris from vacuum pump into vacuum chamber before stopping vacuum pump.
When operating with air-flush OFF (closed), operate as per 4.2.3[page 23].

4.2.3 When returning to standard operation

Before starting air-flush operation, first stop vacuum pump and proceed in accordance with the following procedure. Never perform this procedure during operation.

Remove air-muffler

① Stop vacuum pump.
② Remove air-muffler from air-flush port.
③ Lightly fit plug to air-flush port with a spanner (nominal dia. 13mm).
※When restarting air-flush operation, refer to 4.2.1～4.2.2[page 22 ～ 23] and prepare and start.
※Store removed air-muffler and pay attention not to misplace it.

ISP-250C

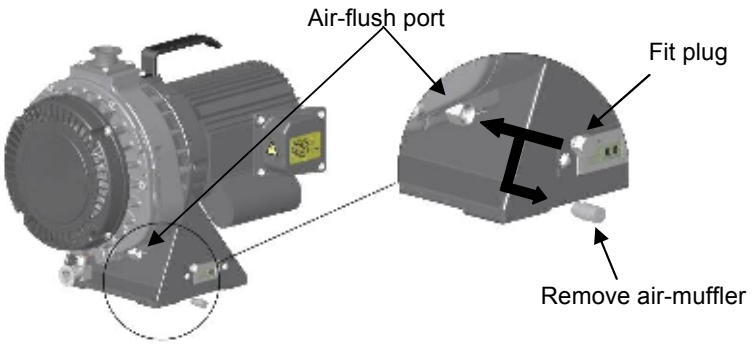

ISP-500C

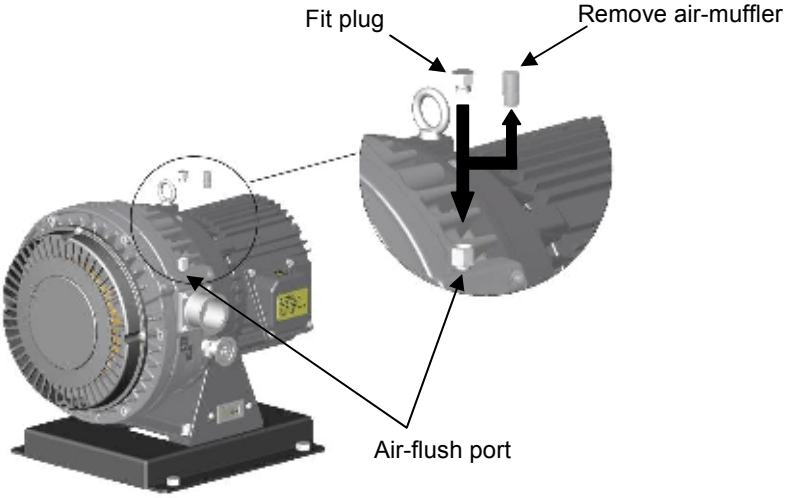

5. Maintenance and inspection

⚠ WARNING	
Danger of failure and bodily injury **Conduct periodical maintenance and inspection.** If not, it can cause insufficient performance, failure of vacuum pump, and bodily injury.	**Conduct periodical maintenance and inspection**
Danger of burns **Conduct maintenance and inspection only after vacuum pump becomes cool enough.** Maintenance and inspection soon after vacuum pump stops can cause burn injury.	**Be careful about high temperature**
Danger of restart **Be sure to switch off electric source before maintenance or inspection.** **Single-phase motor has a thermal protector.** Vacuum pump restarts become cool without warning after vacuum pump.	**With a thermal protector [Only single-phase motor]**
Danger of electric shock **Be sure to conduct maintenance and inspection after you turn off electric source.** If not, it can cause bodily injury from electric shock or turning object.	**Turn off electric source**
Danger of accident, failure and shorter operating lifetime **Ask specialist to perform repairs.** Defective repairs can cause accident, failure or shorter operating lifetime.	**Ask specialist to perform repairs**

5.1 Daily maintenance and inspection

Conduct the following daily maintenance and inspection.

Items	Contents	Measures
Vacuum pump itself	Abnormal sound	Ask specialist to repair.
	Abnormal vibration	Ask specialist to repair.
	Abnormal temperature	Ask specialist to repair.
	Cooling fins are dirty or clogged	Blow air, cleaning
Cooling fan Fan cover	Smooth turning	Ask specialist to repair.
	Dirty, clogged, damaged	Blowing air, clean, Ask specialist to repair.
Air-muffler	Dirty, clogged	Replace
Exhaust valve	Dirty, clogged	Blowing air, clean
Electric source cable	Deteriorated	Replace

5.2 Maintenance

Maintenance interval is when arrives at earlier than either 1 year or 8,000 hr.
When maintenance interval has elapsed, be sure to contact our distributor who sold it to you. This vacuum pump requires maintenance conducted only by our authorized specialist. Never try to disassemble, reassemble or alter on user's side. We are not responsible for any accidents caused by disassembly, reassembly or alteration which was done by the user or non-specialist. As the table below shows average conditions, shorten the maintenance interval and carry out maintenance if ambient and operating conditions are unfavorable or severe. The table below is based on ambient temperature 5～40℃ and yearly average ambient temperature 25℃.
Maintenance interval differs from guarantee period.

The following parts are consumable and need to be replaced periodically.
Whenever something goes wrong with them, replace them immediately.

Where to inspect	Maintenance interval		Every 400 times vapor pumping
	Yearly or every 8,000 hours	Biennially or every 16,000 hours	
Bearing kit	grease／△	○	△
Tip seal set	△	○	△
Seal set	○	○	△
O-ring set	○	○	△
Exhaust valve set	○	○	△
Air-flush kit	○	○	○
Pin crank kit	△	△	△
Vacuum pump itself	Inside cleaning/△	Inside cleaning /△	Inside cleaning /△

○・・・Replace
△・・・Replace if something goes wrong.
Note 1：Maintenance interval should be shorter than either the period or operating hours.
Note 2：When you want further maintenance and inspection after either the 6th year or 48,000 operating hours, please contact our distributor who sold it to you.

Important

Causes of failure
Shorten maintenance interval if conditions of installation or operation are unfavorable.
In particular, ambient temperature has a great influence on failure. Maintenance interval is based on an ambient temperature 5～40℃ and a yearly average ambient temperature 25℃.
Shorten the maintenance interval if temperature exceeds the foregoing. If not, it can cause failure.
Maintenance interval is not a guarantee period.

Exceeding maintenance interval
Operation exceeding maintenance interval increases risk of failure and accidents.
When maintenance interval has elapsed, be sure to contact either the distributor who sold it to you or us.

6. Problems and remedies

If something goes wrong, refer to the following chart and remedy problems.
If you cannot solve your problems, please contact either our distributor who sold it to you or us.

Problems	Causes	Remedies
Motor does not rotate.	Protective device (or breaker) activates.	※Inspect and repair.
	Electric source cable is loose or cut.	Check connection. Repair or replace.
	Voltage drops.	Check size and length of cable.
	Motor malfunctions.	※ Inspect and repair.
	Pump malfunctions. Foreign matter enters.	※Inspect and repair.
	Motor protection gear activates.	Air outlet is clogged. Reset thermal protector. ※Inspect and repair.
Motor stops soon.	Protective device (or breaker) activates.	※Inspect and repair.
	Voltage drops.	Check size and length of cable.
	Motor malfunctions.	※Inspect and repair.
	Pump malfunctions. Foreign matter enters.	※Inspect and repair.
	Improper exhaust piping.	Check exhaust piping diameter and length. Air outlet is clogged. Remove blank flange from exhaust outlet.
	Motor protection gear activates.	Air outlet is clogged. Reset thermal protector. ※Inspect and repair.
Ultimate pressure is insufficient.	Air leaks from piping. O-ring is damaged.	Check tightness of piping. Replace.
	Moisture and solvent are drawn.	Open inlet to atmosphere and operate for a few minutes and then close inlet and operate for about 24 hours. Do air-flush operation. Install trap and filter.
	Number of motor revolutions drops.	Check wiring and voltage. ※Inspect and repair.
	Pump malfunctions.	※Inspect and repair.
Abnormal sound, abnormal vibration	Connection becomes loose.	Tighten connection. ※Inspect and repair.
	The installation is not level.	Correct vacuum pump inclination within 5°. ※Inspect and repair.
	Foreign matter enters pump.	※Inspect and repair.
	Motor malfunctions.	※Inspect and repair.
	Pump malfunctions.	※Inspect and repair.

※ Contact our distributor who sold it to you.

7. Disposal

When a vacuum pump is disposed, please comply with local law and/or regulations such as the Waste Disposal Law.

8. Specifications

8.1 Specifications

8.1.1 ISP-250C

Model			ISP-250C										
Displacement L/min		50Hz	250										
		60Hz	300										
Ultimate pressure Pa			≦1.6										
Leak tightness Pa・m^3/s			≦1.0×10^{-5}										
Max. inlet pressure			Atmospheric pressure										
Ambient operating temperature			5℃～40℃										
Motor	Type		Single-phase induction motor 4P Totally-enclosed Insulation Class B IP44 Capacitor start TP212 Automatic Reset Type				3-phase induction motor 4P Totally-Enclosed Insulation Class B IP44						
	Output	kW	0.4										
	Voltage (note2)	V	100	115	200	230	200	208	230	380	400	415	460
	Rated current A	50Hz	4.8	-	2.6	2.4	1.6	-	-	0.9	0.9	1.0	-
		60Hz	4.8	4.3	2.8	2.4	1.9	1.9	1.8	-	-	-	1.0
	Revolution min^{-1}{rpm}	50Hz	1440	-	1430	1450	1420	-	-	1440	1440	1440	-
		60Hz	1710	1740	1700	1730	1660	1660	1690	-	-	-	1720
Noise level 1m dB(A) With air-flush ON			≦58 ≦66										
Inlet connection			NW25										
Outlet connection			NW16										
Direction of inlet			Vertical										
Dimensions mm L×W×H			400×252×336				370×252×336						
Mass kg			25				23						
Cooling system			Air-cooled										
O t h e r s			With hour counter and air-flush										

Note 1 : Pumping speed and ultimate pressure remain the same during air-flush operation and standard operation.
Note 2 : Motor permissible voltage is ±10%.
Note 3 : Noise level is measured at ultimate pressure in an anechoic room.
Note 4 : Vapor handling is less than 25g/day (25℃, humidity 60%RH) during air-flush operation. Air-flush volume is 10L/min.
Note 5 : Pump is standard operation with 200V connection specifications when it is delivered to you.
Note 6 : Three phase Motor is not equipped with motor protection gear. Be sure to fit protective device.

8.1.2 ISP-500C

Model			ISP-500C										
Displacement L/min		50Hz	500										
		60Hz	600										
Ultimate pressure Pa			≦1										
Leak tightness Pa・m^3/s			≦1.0×10^{-5}										
Max. inlet pressure			Atmospheric pressure										
Ambient operating temperature			5℃～40℃										
Motor	Type		Single-phase induction motor 4P Totally-enclosed Insulation Class B IP44 Capacitor start TP212 Automatic Reset Type				3-phase induction motor 4P Totally-Enclosed Insulation Class B IP44						
	Output	kW	0.6										
	Voltage (note2)	V	100	115	200	230	200	208	230	380	400	415	460
	Rated current A	50Hz	8.5	-	4.3	3.9	2.7	-	-	1.57	1.57	1.63	-
		60Hz	10.0	8.6	4.8	4.0	2.8	2.6	2.5	-	-	-	1.47
	Revolution min^{-1}{rpm}	50Hz	1430	-	1430	1450	1460	-	-	1470	1470	1470	-
		60Hz	1660	1720	1690	1730	1740	1760	1760	-	-	-	1770
Noise level 1m dB(A) With air-flush ON			≦62 ≦70				≦60 ≦68						
Inlet connection			NW40										
Outlet connection			NW25										
Direction of inlet			Horizontal (vertical)										
Dimensions mm L×W×H			443×328×372 (443×290×397)				372×328×372 (372×292×397)						
Mass kg			44				38						
Cooling system			Air-cooled										
O t h e r s			With hour counter and air-flush										

Note 1 : Pumping speed and ultimate pressure remain the same during air-flush operation and standard operation.
Note 2 : Motor permissible voltage is ±10%.
Note 3 : Noise level is measured at ultimate pressure in an anechoic room.
Note 4 : Vapor handling is less than 25g/day (25℃, humidity 60%RH) during air-flush operation. Air-flush volume is 10L/min.
Note 5 : Pump is standard operation with 200V connection specifications when it is delivered to you.
Note 6 : Three phase Motor is not equipped with motor protection gear. Be sure to fit protective device.

8.2 Dimensions

8.2.1 ISP-250C

Three phase

Single phase

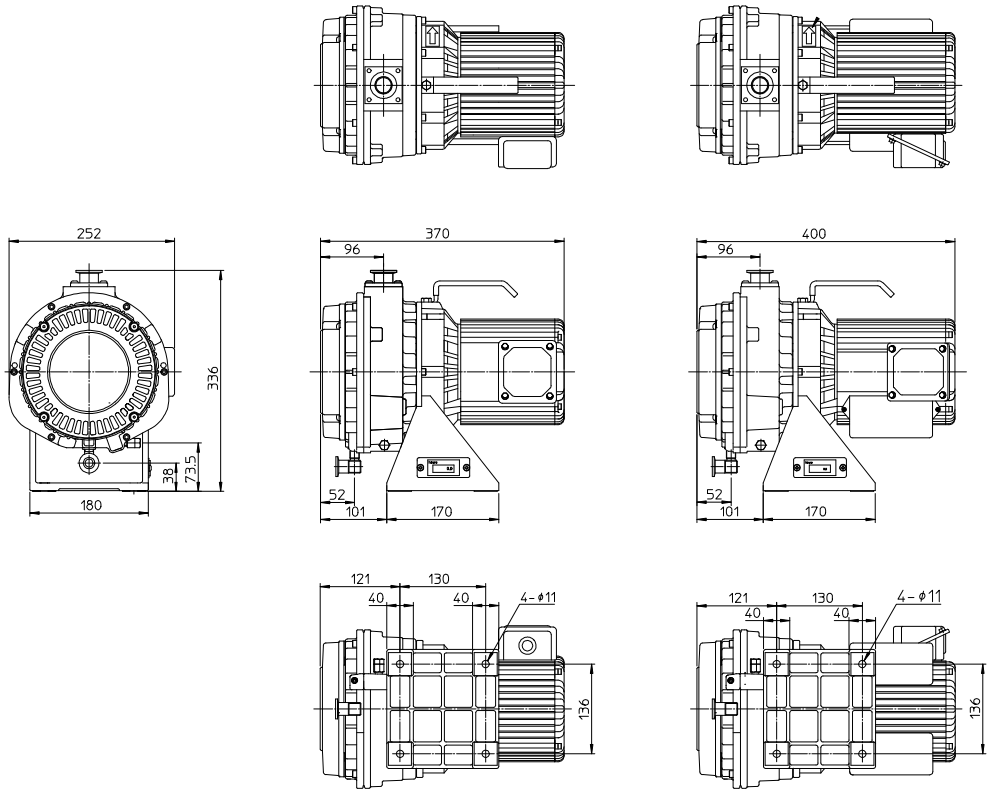

8.2.2 ISP-500C

Three phase

Single phase

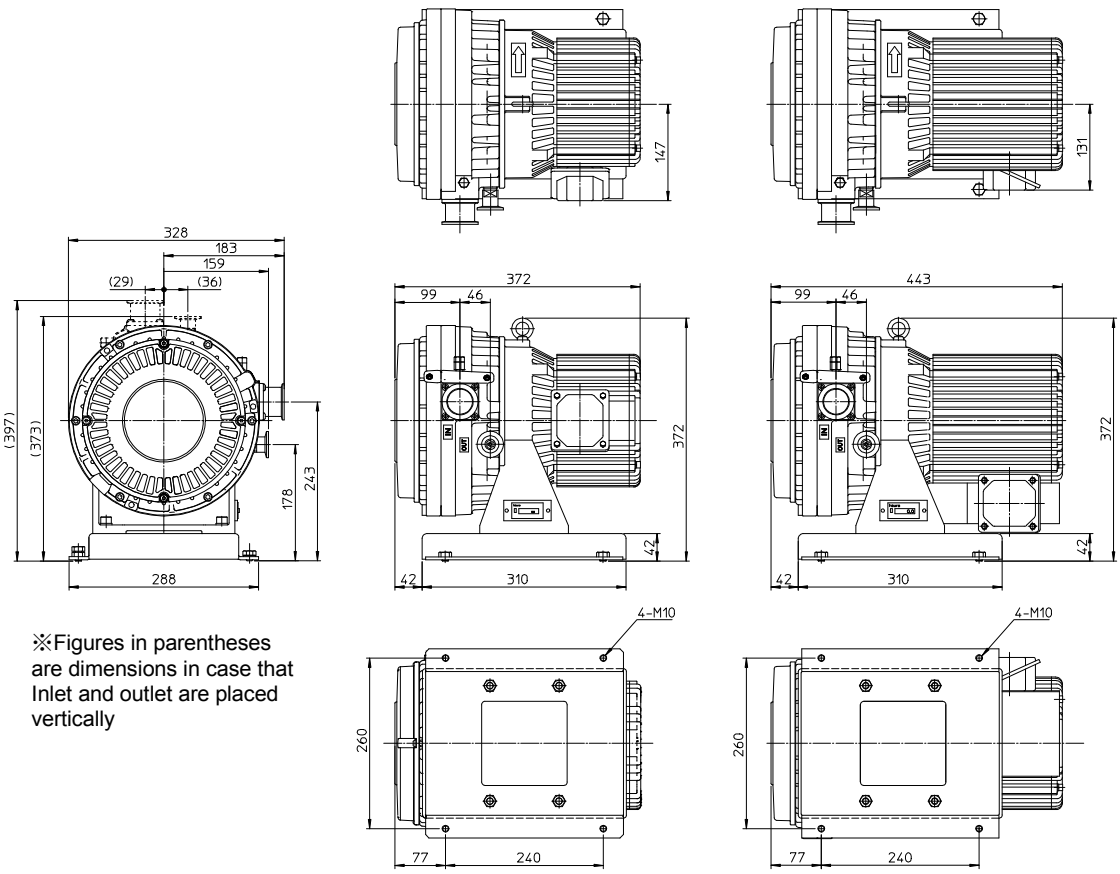

※Figures in parentheses are dimensions in case that Inlet and outlet are placed vertically

8.3 Performance data

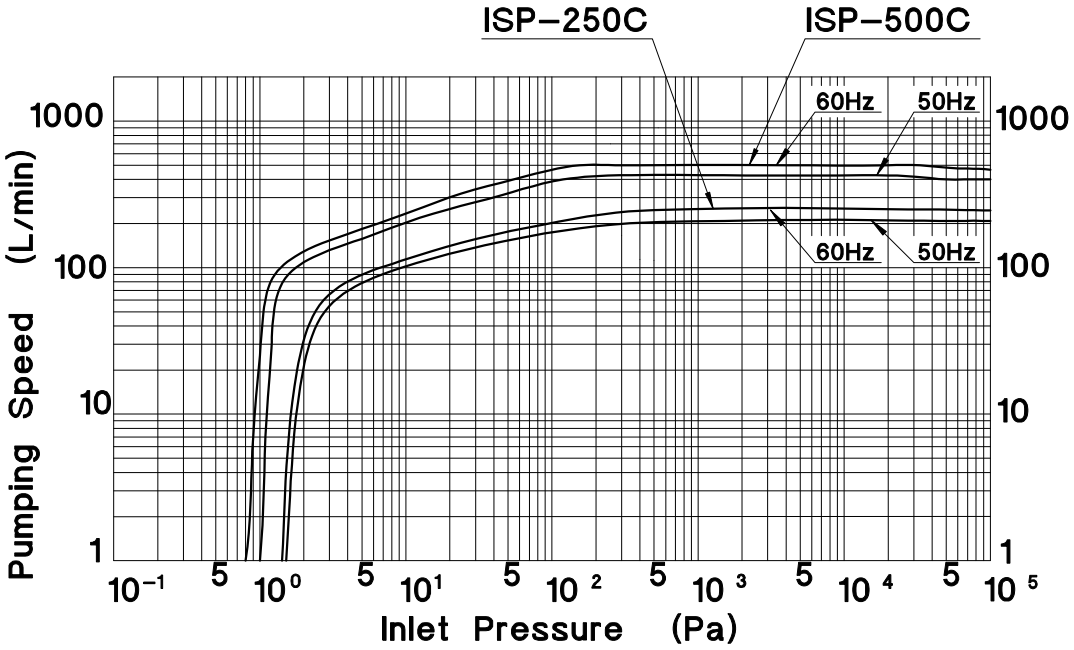

Memo

ANEST IWATA Corporation

Manufacturer

3176,Shinyoshida-cho, Kohoku-Ku,
Yokohama 223-8501, Japan
Tel +81 (0) 45-591-1112
Fax +81 (0) 45-591-1539
http://www.anest-iwata.co.jp/

ANEST IWATA Europe S.R.L.

European agent

Corso Vigevano, 56-10155 Torino ITALY
Tel +39-1-1248-0868
Fax +39-1-185-1944
http://www.anest-iwataeu.com/

Manual No.V059-01
Code No.08816571