OPERATING INSTRUCTIONS

EN

Translation of the original instructions

MVP 040-2, MVP 070-3/3C

Diaphragm Pumps

PFEIFFER VACUUM

PU 0050 BEN/F (1603)

Table of contents

1 About this manual . . . 3
1.1 Validity . . . 3
1.2 Conventions . . . 3
2 Safety . . . 5
2.1 Safety precautions . . . 5
2.2 Proper use . . . 5
2.3 Improper use . . . 6
3 Transport and storage . . . 6
3.1 Transport . . . 6
3.2 Storage . . . 6
4 Product description . . . 7
4.1 Product identification . . . 7
4.2 Function . . . 8
5 Installation . . . 10
5.1 Setting up the pump . . . 10
5.2 Connecting the vacuum side . . . 10
5.3 Connecting the exhaust side . . . 10
5.4 Connecting to the mains power supply . . . 11
6 Operation . . . 13
6.1 Before switching on . . . 13
6.2 Switching on the pump . . . 13
6.3 Pumping condensable vapours . . . 14
6.4 Switching off . . . 14
7 Maintenance . . . 15
7.1 Precautions . . . 15
7.2 Cleaning and replacing diaphragms and valves . . . 16
7.3 Replacing the device fuses . . . 25
8 Decommissioning . . . 26
8.1 Shutting down for longer periods . . . 26
9 Malfunctions . . . 26
9.1 Rectifying malfunctions . . . 27
10 Service . . . 28
11 Spare parts . . . 29
12 Accessories . . . 30
13 Technical data and dimensions . . . 31
13.1 General . . . 31
13.2 Technical data . . . 32
13.3 Dimensions . . . 33
13.4 Substances in contact with the media . . . 34
Declaration of conformity . . . 35

1 About this manual

1.1 Validity

This operating manual is for customers of Pfeiffer Vacuum. It describes the functioning of the designated product and provides the most important information for safe use of the unit. The description follows applicable EU guidelines. All information provided in this operating manual refers to the current state of the product's development. The documentation remains valid as long as the customer does not make any changes to the product.

Up-to-date operating instructions can also be downloaded from www.pfeiffer-vacuum.com.

Applicable documents

MVP 040-2, MVP 070-3/3C	Operating instructions
Declaration of Conformity	Part of this document
Operating instructions for accessories (order-specifically)	see section "accessories"*

*also available via www.pfeiffer-vacuum.com

For information about other certifications, if applicable, please see the signet on the product or:

- www.tuvdotcom.com
- TUVdotCOM-ID 0000021320

1.2 Conventions

Safety instructions

The safety instructions in Pfeiffer Vacuum operating instructions are the result of risk evaluations and hazard analyses and are oriented on international certification standards as specified by UL, CSA, ANSI Z-535, SEMI S1, ISO 3864 and DIN 4844. In this document, the following hazard levels and information are considered:

DANGER

Imminent danger
Indicates an imminent hazardous situation that will result in death or serious injury.

WARNING

Possibly imminent danger
Indicates an imminent hazardous situation that can result in death or serious injury.

CAUTION

Possibly imminent danger
Indicates an imminent hazardous situation that can result in minor or moderate injury.

NOTICE

Command or note
Command to perform an action or information about properties, the disregarding of which may result in damage to the product.

Pictographs

Prohibition of an action or activity in connection with a source of danger, the disregarding of which may result in serious accidents

Warning of a displayed source of danger in connection with operation of the unit or equipment

Command to perform an action or task associated with a source of danger, the disregarding of which may result in serious accidents

Important information about the product or this document

Instructions in the text

➔ Work instruction: here you have to do something.

Abbreviations

C version: Corrosive gas version

Symbols used

The following symbols are used consistently throughout in all illustrations:

- Vacuum connection
- Exhaust
- Gas ballast valve
- Power connection

2 Safety

2.1 Safety precautions

Duty to inform

Each person involved in the installation, operation or maintenance of the vacuum pump must read and observe the safety-related parts of these operating instructions.

➔ The operator is obligated to make operating personnel aware of dangers originating from the vacuum pump, the pumped medium and the entire system.

- Before pumping dangerous, corrosive or environmentally hazardous media, take suitable precautions:
  - Test the compatibility with substances in contact with the media.
  - Prevent the release of process gases and their reaction products and by-products or dispose of them according to the relevant regulations.
  - Safety measures (e.g. wearing protective clothing and safety goggles) to prevent inhalation and skin contact.
- Before pumping gases which could form ignitable mixtures, take suitable precautions:
  - By implementing the required safety measures, prevent potentially explosive mixtures from occurring in the housing and from being ignited in the event of a diaphragm crack by mechanically produced sparks, hot surfaces or static electricity.
  - If necessary, use inert gas for gas ballast supply or ventilation.
- Connect the vacuum pump to a shockproof socket only.
  - Use only undamaged network cables which comply with the regulations.
  - Make sure that the grounding is sufficient.
- Do not expose any body parts to the vacuum.
- Observe the safety and accident prevention regulations.
- Check regularly that all safety precautions are being complied with.
- Do not carry out any unauthorised modifications or conversions to the pumps.
- Depending on the operating and ambient conditions, the surface temperature of the pumps may rise above 70 °C. Use suitable finger guards if necessary.
- When returning the pumps to us please note the instructions in the Service section.

2.2 Proper use

NOTICE

EC conformity

The manufacturer's declaration of conformity becomes invalid if the operator modifies the original product or installs additional components.

➔ Following installation into a plant and before commissioning, the operator must check the entire system for compliance with the valid EU directives and reassess it accordingly.

- The vacuum pump may only be used to generate a vacuum.
- Installation, operating and maintenance regulations must be complied with.
- Other accessories, than those described in this manual, must not be used without the agreement of Pfeiffer Vacuum.
- When pumping gases which could form explosive or ignitable mixtures, take suitable precautions:
  - If necessary, connect inert gas for ventilation or gas ballast supply.

2.3 Improper use

Improper use will cause all claims for liability and warranties to be forfeited. Improper use is defined as usage for purposes deviating from those mentioned above, especially:

- pumping of corrosive gases (exception: pumps in C version)
- pumping of explosive media
- operation in potentially explosive areas
- pumping of gases containing impurities such as particles, dusts and condensate; note the vapour compatibility levels of the pump
- pumping of substances that tend to sublime
- use of the vacuum pump to generate pressure
- pumping of liquids
- connection to pumps or units which are not suitable for this purpose according to their operating instructions
- connection to units which have exposed voltage-carrying parts

3 Transport and storage

3.1 Transport

➔ Remove the locking cap from the vacuum and fore-vacuum flange immediately before connecting!

➔ Use only the handles provided for that purpose to lift the pump.

– Do not use the interhead connections on the top side of the pump to carry the pump.

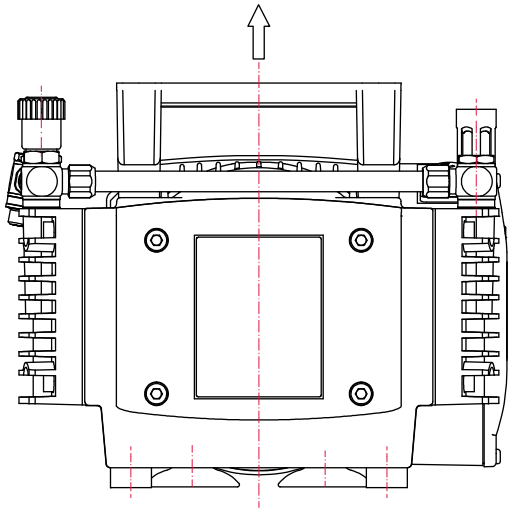

Fig. 1: Transporting the pump

3.2 Storage

➔ Check that all the openings on the pump are securely closed.

➔ Store the pump in a cool, dry place; preferably at room temperatures (approx. 20 °C).

– For a longer period of storage, seal the pump in a PE bag with drying agents enclosed.

4 Product description

4.1 Product identification

To correctly identify the product when communicating with Pfeiffer Vacuum, always have the information from the rating plate available.

- Pump model and model number
- Serial number
- Date of manufacture

Scope of delivery

- Pump with mains power supply (switchable) via rubber socket
- Locking caps for vacuum and exhaust flange
- Operating manual

Differences between the pump versions

Pump type	Pump designs
MVP 040-2	Standard version: ● G 1/4" elbow union with enclosed hose 10/8, 1000 mm with an elbow union in G 1/4" at the end
MVP 070-3	Standard version: ● G 1/4" elbow union with enclosed hose 10/8, 1000 mm with an elbow union in G 1/4" at the end
MVP 070-3C	C version: ● DN 16 ISO-KF

4.2 Function

The diaphragm vacuum pumps of the series MVP 070-3 are three stage and those of the MVP 040-2 series are two stage, dry compressor vacuum pumps. The pumps are positive displacement pumps with a periodic change of size of the suction chamber produced by the movement of the diaphragm. The gas flow causes the valves to open and close automatically. The pump units are directly connected to the drive motor.

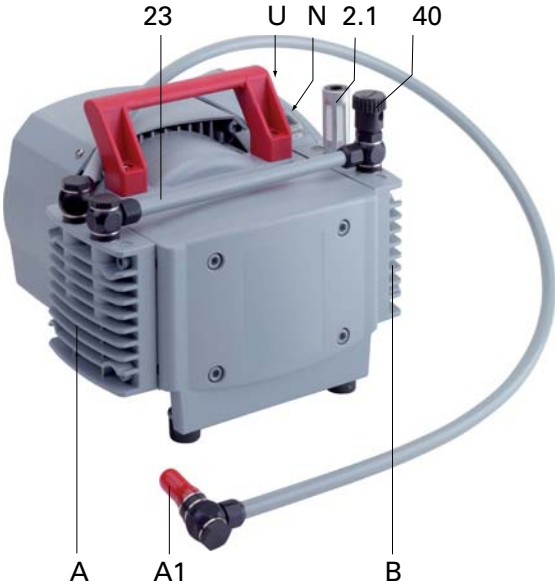

A1	Vacuum connection
2.1	Exhaust (with silencer)
A	Diaphragm head 1
B	Diaphragm head 2
N	Power switch
U	Voltage selector switch
23	Hose connection
40	Gas ballast valve

Fig. 2: MVP 040-2

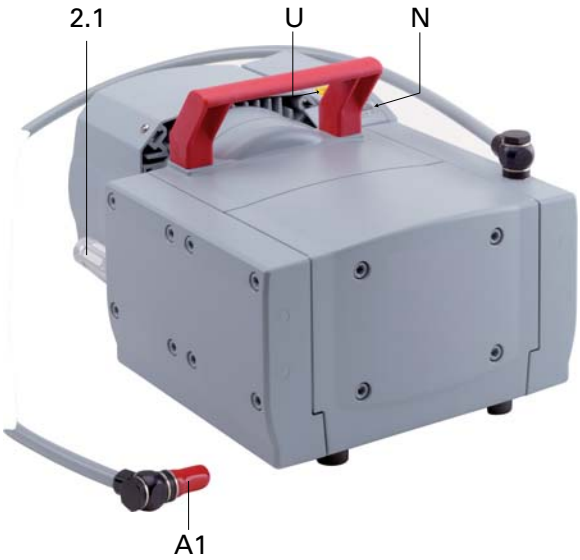

A1	Vacuum connection
2.1	Exhaust (with silencer)
N	Power switch
U	Voltage selector switch

Fig. 3: MVP 070-3

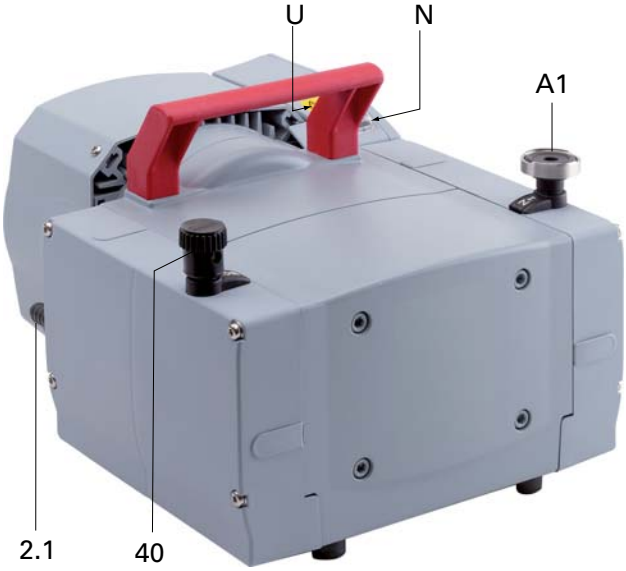

A1 Vacuum connection
2.1 Exhaust
N Power switch
U Voltage selector switch
40 Gas ballast valve

Fig. 4: MVP 070-3C

5 Installation

5.1 Setting up the pump

Installation location

Observe the following requirements when setting up the pump:

- Consider the load-bearing capacity of the installation site.
- Maximum installation altitude 2000 m (above mean sea level)
- Permissible ambient temperature: +12 ... 40°C
- Maximum relative humidity 85%

➔ Always place the pump on a firm, even surface.
  – Where stationary installation is involved, anchor the pump on site.

➔ When installing the pump in a closed housing, ensure there is sufficient air circulation.
  – Voltage and frequency information given on the motor rating plate must be visible.
  – Keep the ventilation openings at the motor free, in order to provide sufficient cooling air.

5.2 Connecting the vacuum side

➔ Remove locking cap on intake connection and connect vacuum pump to the apparatus.

➔ The connection between the pump and the vacuum chamber should be kept as short as possible.
  – Depending on the pump type, use metallic hoses or PVC hoses with flange connections.
  – Separators, filters etc. may be installed upstream to protect the pump (see accessories). However, please observe the loss of pumping capacity due to the conductivity of the accessories.

5.3 Connecting the exhaust side

CAUTION

High pressure in the exhaust line!

Danger of damage to the seals and danger of the pump bursting.

➔ Install the line without shut-off valves on the exhaust side.

➔ Do not operate the pump with excess pressure at the inlet; observe the maximum allowable pressures and pressure differences.

➔ Choose the cross-section of the exhaust line to be at least the size of the nominal connection diameter of the vacuum pump's exhaust connection.

➔ Piping to the pump must be suspended or supported.
  – Physical forces from the piping system must not be allowed to act on vacuum pumps.

➔ Lay piping from the pump sloping downward so that no condensate can flow back into the pump; otherwise fit a condensate separator.
  – If an air trap is created in the system, then a device for draining condensation water must be provided at the lowest point.

WARNING

Emission of toxic substances from the exhaust!

Danger of poisoning from emitted gases or vapours, which can be detrimental to health and/or can pollute the environment, depending on the particular application.

➔ Comply with the applicable regulations when working with toxic substances.

➔ Only officially approved filter systems may be used to separate and remove these substances.

5.4 Connecting to the mains power supply

The pump is driven by single-phase extended voltage range motors with reversible voltage ranges.

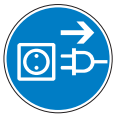

NOTICE

Excess voltage!

Danger of destroying the motor.

➔ Power connections must comply with local regulations. Voltage and frequency information given on the motor rating plate must correspond to the mains voltage and frequency values.

➔ To protect the motor and supply cable in case of malfunction, mains fuse protection must be implemented.

Single phase motors

➔ The mains voltage must be determined on-site each time before the pump is installed or moved to a different location.

NOTICE

Overvoltage!

An incorrect voltage range setting can damage the motor.

➔ Always check the set voltage range before switching on the pump.

➔ Only change the voltage range when the pump is disconnected from the power mains.

Changing the voltage range

➔ Disconnect the pump from the power supply.

➔ Set the desired voltage range on the voltage selector switch using a suitable screwdriver.

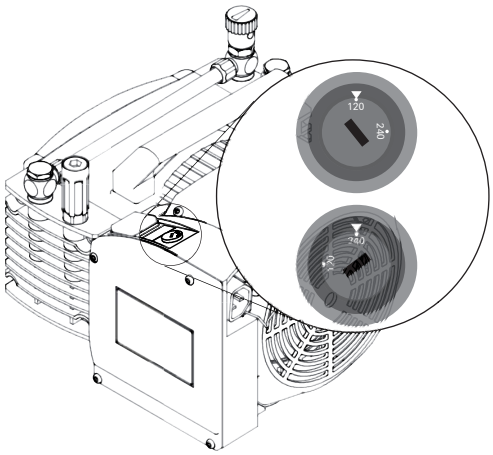

Switch position:	"115/120"	"230/240"
Voltage ranges:	100-115 V, 50/60 Hz, 120 V, 60 Hz	200-230 V, 50/60 Hz

Motor protection

A self-locking thermal winding protector switches off the pump motor in the event of overheating (> 95°C).

➔ Allow the pump to cool off several minutes and do not switch it back on until it has cooled off.

Intermittent operation with TC via relay box (accessory)

Connection of diaphragm pumps in the pumping station according wiring diagram in operating instructions of the relay box (accessory):

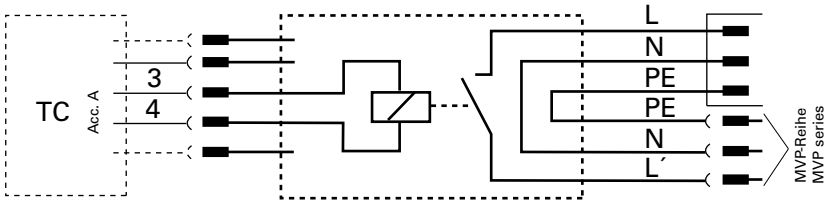

Fig. 5: Connection with relay box (PM 061 372-T/374-T) to TC 110/400

6 Operation

6.1 Before switching on

➔ Compare the voltage information on the rating plate with the supply voltage.

➔ Check that the exhaust connection allows free flow (max. permissible pressure 110 hPa absolute).

– Activate the shut-off valves in such a way that they open before or at the same time as the pump is started.

➔ Protect the pump sufficiently from taking in contaminants by means of suitable precautions (e.g. dust filters).

CAUTION

Dangerous overpressure overload!

Mixing up the connections leads to a dangerous overpressure overload in the pump, and the motor could be damaged.

➔ Before commissioning, make sure that no impermissibly high pressure arises on the pressure side.

➔ Start pumps at a maximum pressure differential of 1000 hPa between inlet and outlet.

6.2 Switching on the pump

The pump can be switched on in any pressure range between atmospheric and ultimate pressure.

No special precautions are necessary when pumping dry gases. In order to attain the lowest possible ultimate pressures, the gas ballast valve should be closed.

The pump attains the stated values for throughput rates and ultimate pressure levels only once the operating temperature is reached.

➔ Switch on the pump with the vacuum flange closed and allow to warm up for 30 minutes.

CAUTION

Hot surface!

Danger of burns if hot parts are touched. Depending on the operating and ambient conditions, the surface temperature of the pump may rise above 70 °C.

➔ In this case, use suitable finger guards.

6.3 Pumping condensable vapours

Should the process gases contain condensable gases present at high percentages, the vacuum pump must be operated with a gas ballast (i.e. with an open gas ballast valve).

WARNING

Reactive, explosive or otherwise dangerous mixtures!

Uncontrolled gas inlet at the gas ballast valve can result in dangerous mixtures.

➔ By implementing the required safety measures, the user must prevent potentially explosive mixtures from occurring in the inside of the pump and from being ignited in the event of a diaphragm crack by mechanically produced sparks, hot surfaces or static electricity.

➔ If necessary, use inert gas for ventilation and gas ballast supply.

NOTICE

Bad ultimate pressure and damage to the pump!

Danger of condensation and a reduced ultimate pressure during operation without a gas ballast or in case of insufficient supply of flushing gas.

➔ Only pump vapors when the pump is warm and the gas ballast valve is open.

➔ When the process has been completed, allow the pump to continue running for about 30 minutes at atmospheric pressure with the gas ballast open.

Gas ballast valve

Letting in gas ballast improves the discharge of condensate, and the pump achieves the specified final vacuum more quickly.

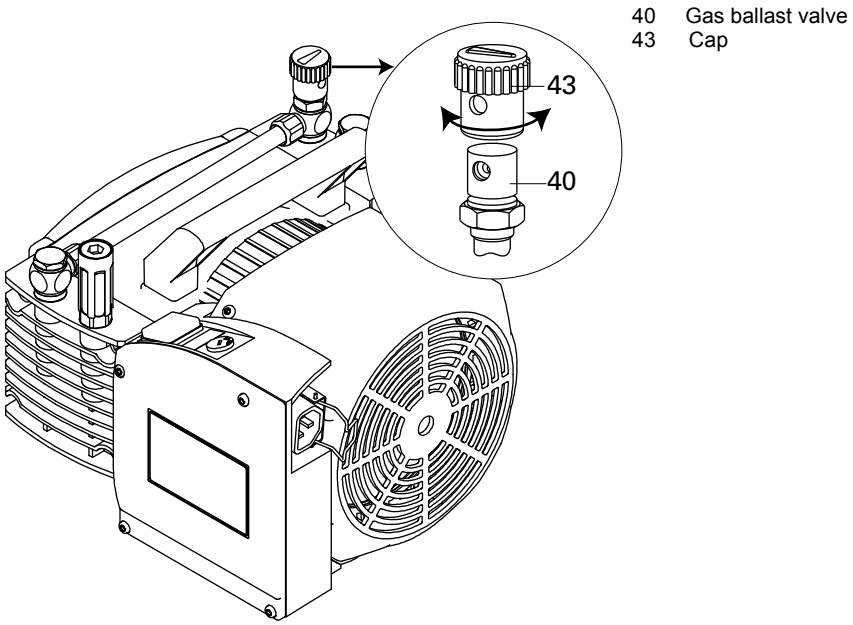

Fig. 6: Operation with gas ballast valve

➔ Open gas ballast valve; to do so, turn cap 43 on the gas ballast valve 40 so that the two holes line up.

6.4 Switching off

The pump can be switched off in any pressure range.

7 Maintenance

7.1 Precautions

WARNING

Pump parts may be contaminated from pumped media!

Danger of poisoning due to contact with harmful substances.

➔ Decontaminate the pump before carrying out any maintenance work.

➔ In the event of contamination, take suitable safety precautions to prevent your health from being harmed by any dangerous substances.

The valves and the diaphragms are wear parts. If the rated ultimate vacuum is no longer achieved, the pump interior, the diaphragms and the valves must be cleaned and the diaphragms and valves must be checked for cracks or other damage.

Depending on individual cases it may be efficient to check and clean the pump heads on a regular basis. In case of normal wear the lifetime of the diaphragms and valves is **15.000** operating hours.

➔ Allow the pump to cool to a safe temperature.

➔ Only dismantle the pump as far as necessary to carry out maintenance.

➔ Use only alcohol or similar agents for cleaning pump parts.

➔ Reassemble pump in reverse order.

NOTICE

Service work should be carried out by a qualified person only!

Pfeiffer Vacuum is not liable for any damage to the pump resulting from work carried out improperly.

➔ Take advantage of our service training programs; additional information at www.pfeiffer-vacuum.com.

➔ Please state all the information on the pump rating plate when ordering spare parts.

Checklist for inspection, maintenance and overhaul

Certain maintenance and overhaul work should only be performed by Pfeiffer Vacuum Service (PV). Pfeiffer Vacuum will be released from all warranty and liability claims if the required, below listed, intervals are exceeded or maintenance or overhaul procedures are not performed properly. This also applies if replacement parts other than Pfeiffer Vacuum OEM replacement parts are used.

Activity	daily	as required; at least once every six months	as required; at least after 15.000 h	as required; at least every 2 years
Check silencer for contamination		X		
Clean, change valves and diaphragms			X	
Change silencer				X

Depending on the process, the required intervals for inspection and maintenance may be shorter than the guide values specified in the table. Please consult Pfeiffer Vacuum, if necessary.

7.2 Cleaning and replacing diaphragms and valves

MVP 040-2

Cleaning and replacing the valves

➔ Turn off the vacuum pump, vent to atmospheric pressure and allow to cool.

➔ Disconnect the drive motor from the mains and secure it so that it cannot be switched on.

➔ Unscrew the hose connection between the pump stages by loosening the hollow screw with a wrench (size 17).

➔ Remove the cheesehead screws 26 (four per membrane head).

➔ Remove housing cover G with head cover K; prevent the head cover from falling out of the housing cover.

➔ Remove head cover K from housing cover G to check valves 11.

➔ Taking care with the position of valves 11, remove and check for damage, and replacing if necessary.

➔ Check diaphragm pair 10 for damage and replace if necessary.

NOTICE

Damage to the valves

Valves can be destroyed by gluing to after wrong installation.

➔ Pay attention to the fitting position of the inlet and outlet valves. The valve flap of the valves may not cover the groove in the head and housing cover.

➔ Clean all parts and inspect for wear.

➔ Reassemble pump in reverse order.

➔ Check the other membrane head in the same way.

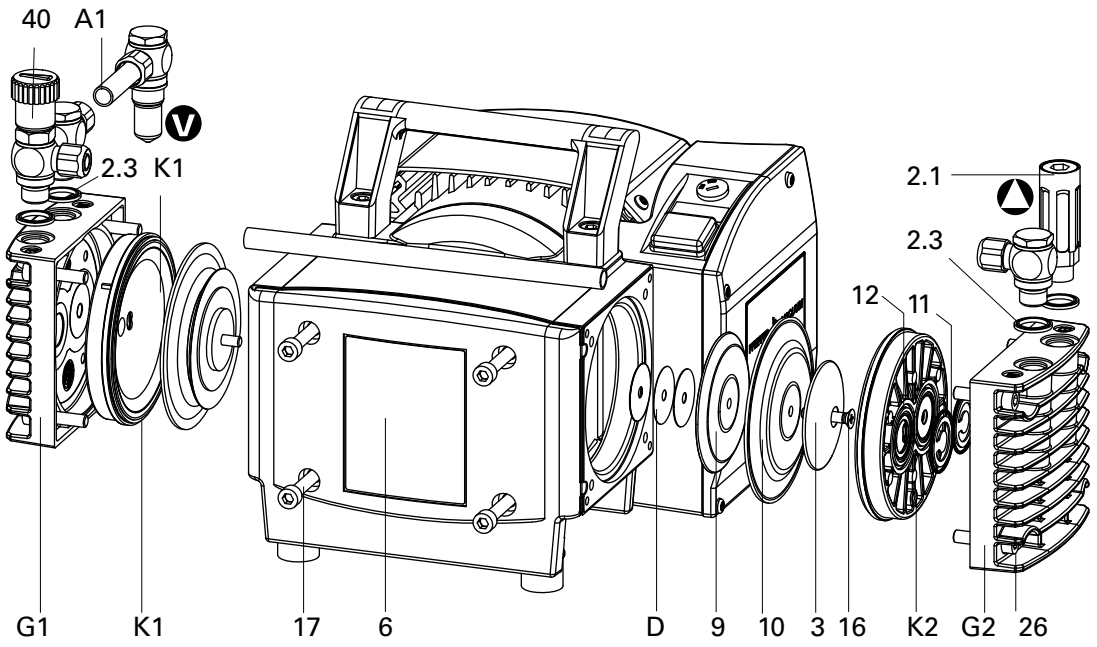

Fig. 7: MVP 040-2

A1	Vacuum connection with compression coupling in G 1/4"	K2	Head cover, outlet side	11	Inlet and outlet valve
D	Spacer disks	2.1	Silencer	12	O-ring
G1	Housing cover, inlet side	2.3	Sealing ring	16	Countersink screw
G2	Housing cover, outlet side	3	Diaphragm spring washer	17	Countersink screw
K1	Head cover, inlet side	6	Housing panel	26	Socket cap screw
		9	Diaphragm support disk	40	Gas ballast valve
		10	Diaphragm pair		

Changing the diaphragm

➔ Dismantle membrane heads as described before.

➔ Remove screw 16; this screw has been stuck to make secure against loosening.

NOTICE

Damage to the pump and bad ultimate pressure!

A changed dead centre (TDC) leads in the most unfavorable case to a bearing damage.

➔ Check for spacer disk D.

➔ Make sure that the original number is reassembled at the individual membrane head.

➔ Dismantle diaphragm spring washer 3, diaphragm pair 10 and diaphragm support washer 9.

– If it is difficult to separate the old diaphragm from support washer 9, apply e.g. alcohol or petroleum ether.

Assembly

➔ When existing, re-fit spacer disks D under the diaphragm support disk 9.

➔ Put two single diaphragms with their rough side together so that the labelled side of the two diaphragms are readable.

➔ Arrange diaphragm support washer 9, diaphragm pair 10 and diaphragm spring washer 3 onto screw 16.

➔ Place some threadlocker (low strength) under the head of screw 16 and screw in conrod.

➔ Refit head cover, valves 11 and housing cover in reverse order, taking care with the position of the valves.

➔ First gently and then firmly tighten diagonally-offset cheesehead screws 26; torque: **12 Nm**.

Dissimilar valves!

Pump not achieving the specified ultimate pressure

➔ Make sure the valves have the correct mounting orientation; the outlet valve in head cover K1 and the inlet valve in head cover K2 are from PTFE (white). The two other valves are from FPM (brown).

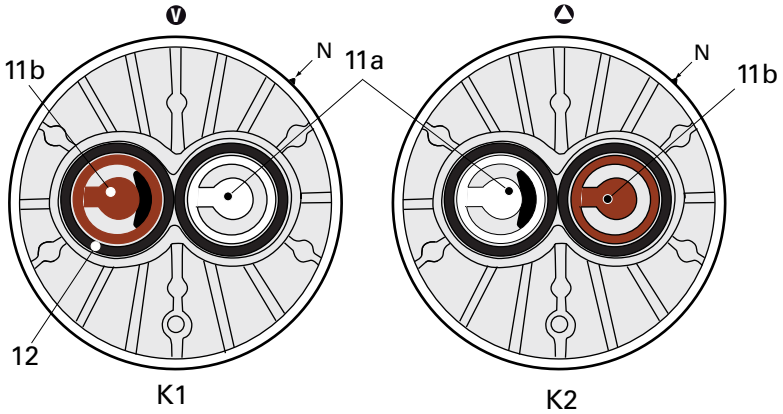

Fig. 8: Position of the valves 11 in the head covers K1/K2

MVP 070-3

Cleaning and replacing the valves

➔ Turn off the vacuum pump, vent to atmospheric pressure and allow to cool.
➔ Disconnect the drive motor from the mains and secure it so that it cannot be switched on.
➔ Mount pump to the side, provide suitable support as necessary.
➔ Remove the cheesehead screws 26 (four per membrane head).
➔ Remove housing cover G with head cover K; prevent the head cover from falling out of the housing cover.
➔ Remove head cover K from housing cover G to check valves 11.
➔ Taking care with the position of valves 11, remove and check for damage, and replacing if necessary.
➔ Check diaphragm pair 10 for damage and replace if necessary.
➔ Replace the two O-rings 12 enclosing the valve seat.
➔ Clean all parts and inspect for wear.
➔ Reassemble pump in reverse order.
➔ Follow the same procedure for the other diaphragm heads.

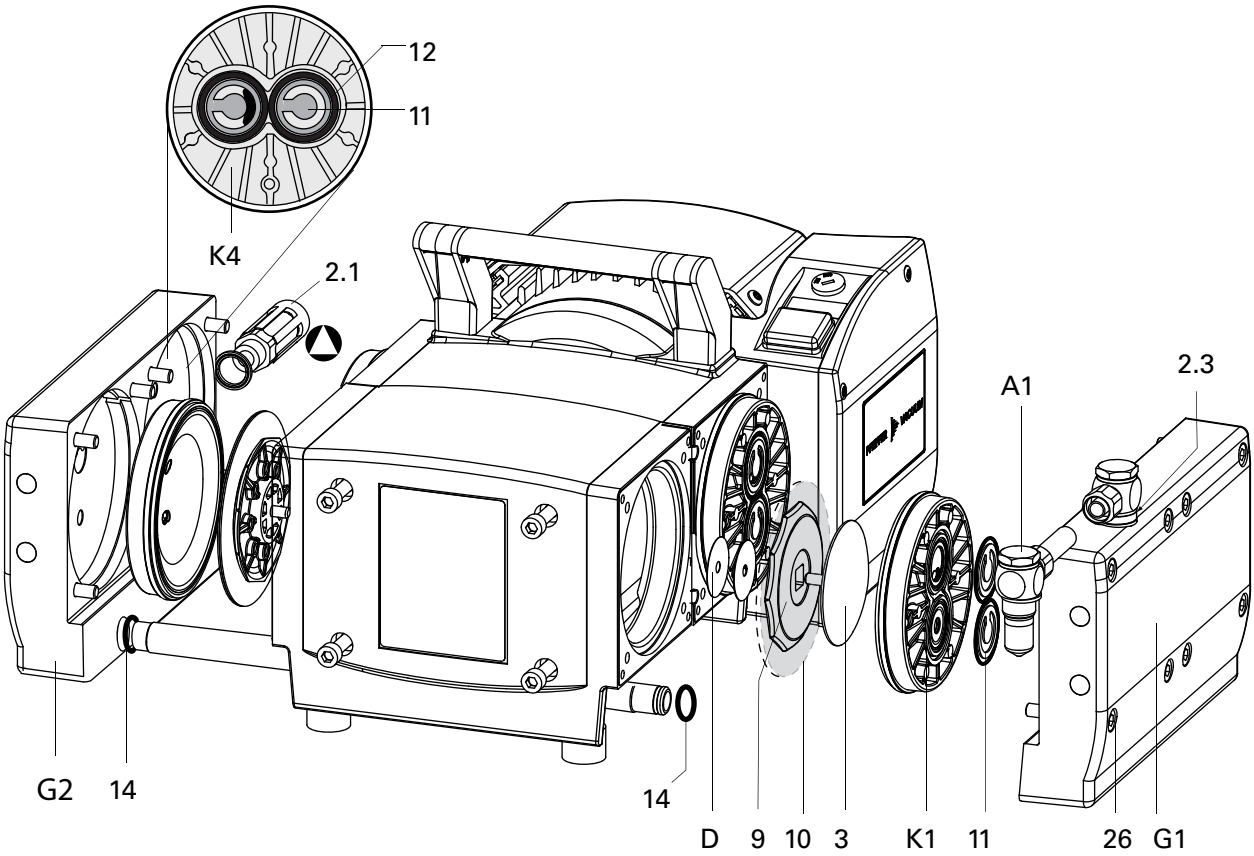

Fig. 9: MVP 070-3

G1	Housing cover 1	3	Diaphragm spring washer	11	Inlet and outlet valves (FPM)
G2	Housing cover 2	9	Diaphragm support washer	12	O-ring
K4	Head cover membrane head 4	10	Diaphragm pair	14	O-ring
2.1	Silencer			26	Cheesehead screw
2.3	Seal ring				

Changing the diaphragm

Attach the diaphragm key

- ➔ Carefully raise the diaphragm at the side without causing it any damage; do not use sharp-edged tools.
- ➔ Slide diaphragm key under the diaphragm until it reaches the support disk.
- ➔ Use the diaphragm key to loosen the diaphragm support disk and unscrew together with diaphragm and diaphragm clamping disk.
- ➔ If the old diaphragm pair is difficult to separate from the diaphragm support disk 9, loosen in alcohol or petroleum.

Assembly

- ➔ **Assembling** is carried out in reverse order.
- ➔ Put two single diaphragms with their rough side together so that the labelled side of the two diaphragms are readable.
- ➔ Position new diaphragm pair 10 between diaphragm spring washer 3 with square head screw and diaphragm support washer 9; make sure that the square head screw of the diaphragm clamping disc is correctly seated in the guide hole of the diaphragm support disc.

NOTICE

Damage to the pump and bad ultimate pressure!

A changed dead centre (TDC) leads in the most unfavorable case to a bearing damage.

- ➔ Check for spacer disk D.
- ➔ Make sure that the original number is reassembled at the individual membrane head.

Installing the diaphragm

- ➔ Raise the diaphragm at the side and carefully slide the diaphragm key through to the diaphragm support disk.
- ➔ Screw diaphragm spring washer, diaphragm, diaphragm support washer and spacers (if applicable) to connecting rod; optimum torque: **6 Nm**.
  - – It is recommended to use a torque key, attach hex key to diaphragm key (hexagonal bolt 6 mm wide).
- ➔ Bring the diaphragms into a position in which they are in contact with the housing and centred with respect to the bore.
- ➔ Mount head cover; ensure correct orientation:
  - – Align the nose (N) with the notch in the housing cover.
- ➔ Insert the valves and O-rings into their respective positions; ensure the valves are correctly aligned.
- ➔ Mount housing cover; insert the connecting pipe for the two housing covers on the housing cover;
  - – ensure the sealing rings are correctly positioned in the pipe grooves; replace O-rings as necessary.
- ➔ Refit head cover, valves 11 and housing cover in reverse order, taking care with the position of the valves.
- ➔ First gently and then firmly tighten diagonally-offset cheesehead screws 26; torque: **12 Nm**.

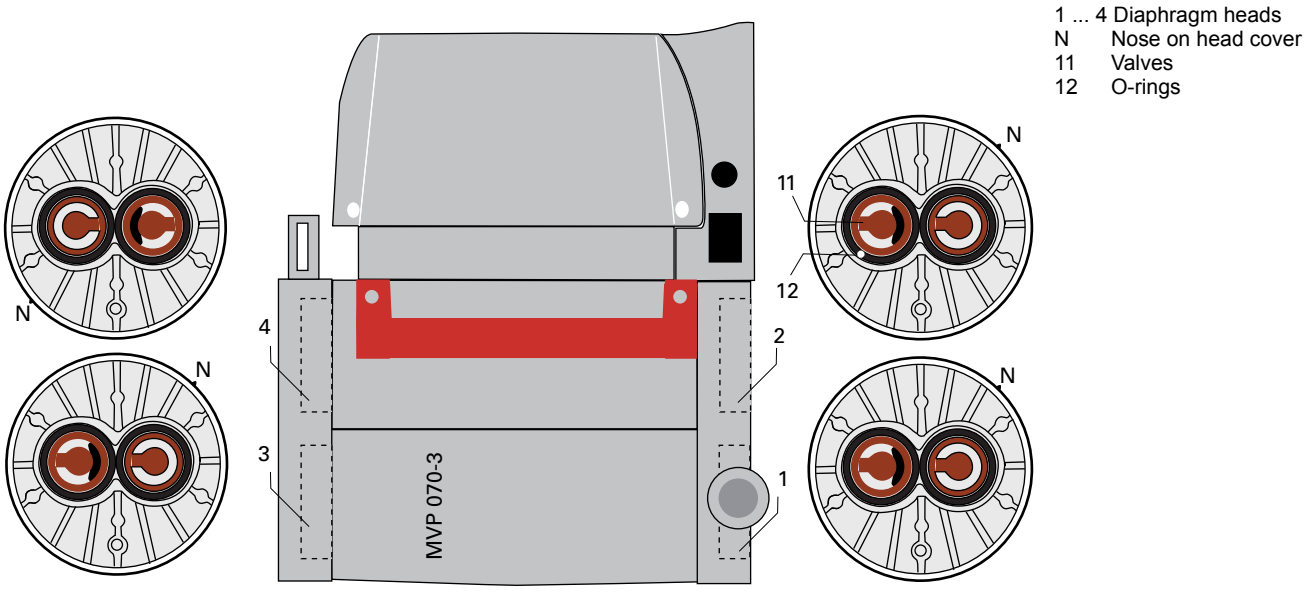

Fig. 10: Positions required for installing the valves 11

MVP 070-3C

Cleaning and replacing the valves

Service the pump heads of only one pump side at the same time.

➔ Turn off the vacuum pump, vent to atmospheric pressure and allow to cool.

➔ Disconnect the drive motor from the mains and secure it so that it cannot be switched on.

➔ Open the hinged cover of the connection fastener 17.

➔ Loosen the fillister head screw with a Torx screwdriver TX20; do not detach the screw completely.

➔ Use a TX20 torx screwdriver to undo the 4 screws on the head cover hood; pay attention to the spring washers beneath the screws.

➔ Pull head cover hood forward and remove.

➔ Carefully move the diaphragm pump into a lateral position so that the pump heads to be serviced are pointing upwards; support the pump below the motor as necessary.

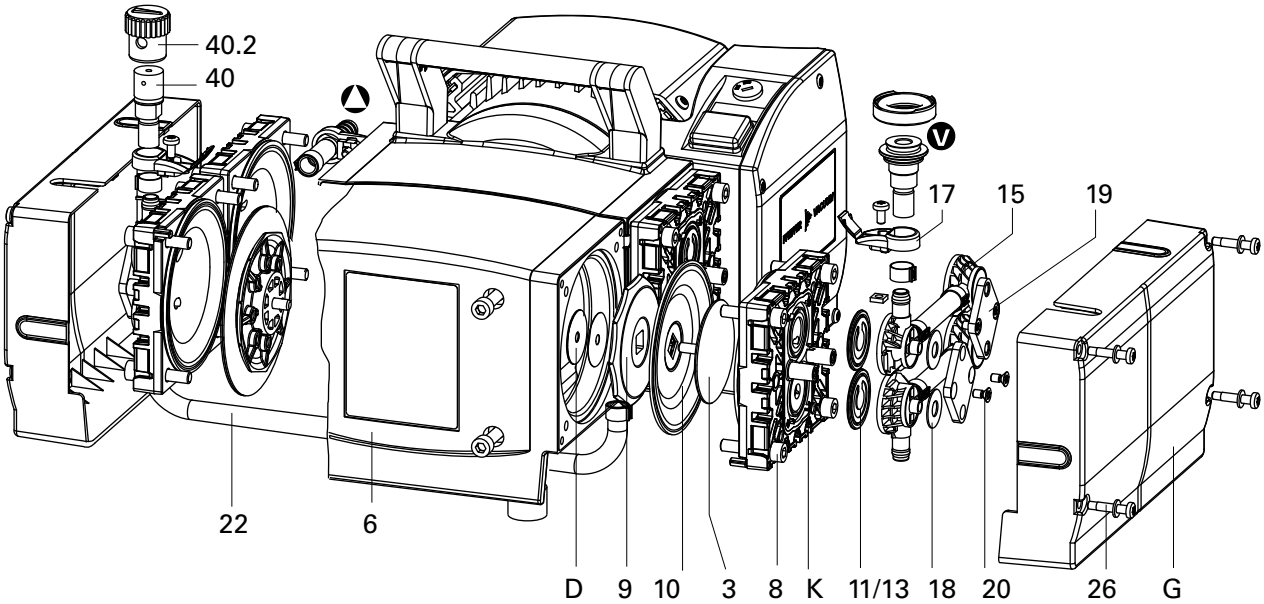

Fig. 11: MVP 070-3C

D	Spacers	11	Inlet and outlet valves II	19	Clamping claw
G	Head cover hood	13	O-ring	20	Countersunk screw
K	Head cover	15	Valve head	22	Connecting hose
3	Diaphragm spring washer	17	Connection holder with hinged cover	26	Fillister head screw
6	Housing panel			40	Gas ballast valve
9	Diaphragm support washer	18	Disc spring	40.2	Rubber cap for pos. 40
10	Diaphragm (individual part)				

Loosen hose clamp

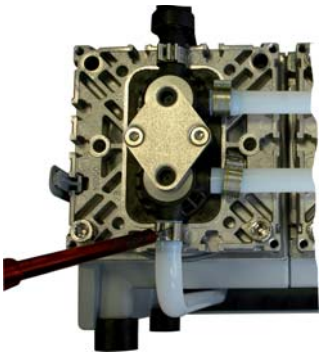

➔ Loosen U-hose connection (hose connection to the opposite side of the pump);

– do this by levering out the hose clamp with a flat-blade screwdriver and removing the hose.

Loosen clamping claws on the valve heads

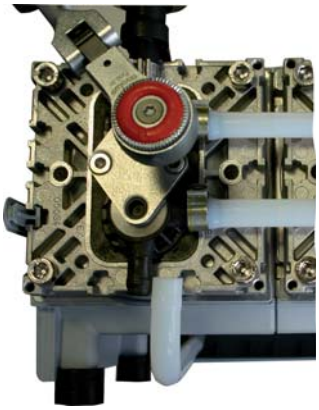

➔ Using a TX20 torx screwdriver, undo two countersunk screws on each side and remove the clamping claws;
  – the head covers remain assembled.

➔ Completely remove valve heads together with disc springs, where applicable with connecting hose, hose clips and connection holders;
  – ensure the valves are correctly seated.

➔ Check valves and O-rings for damage and contamination; clean or replace parts as necessary.

Assembly

➔ Insert valves and O-rings; ensure valves are correctly seated.

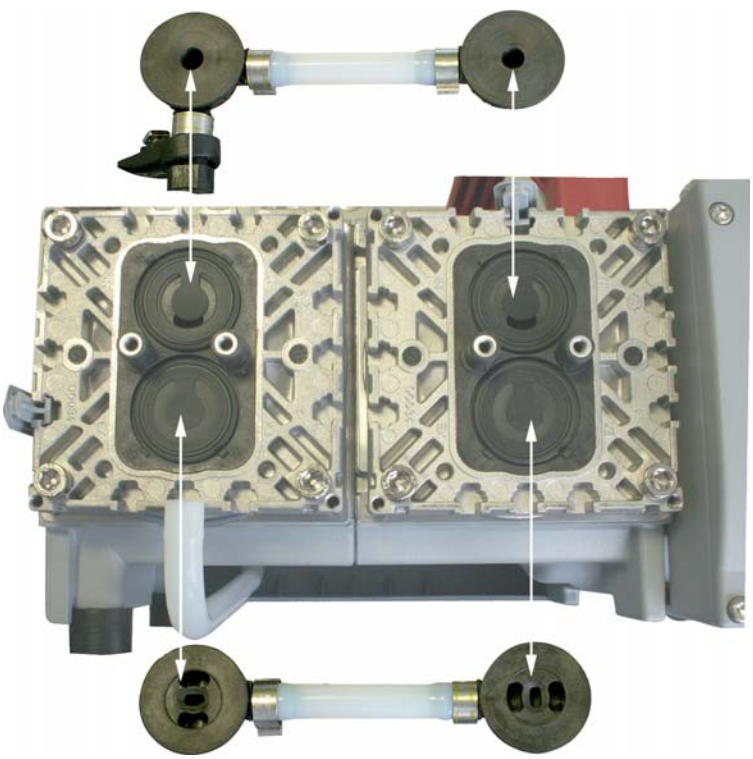

Fig. 12: Valve orientation

- Inlet side (**IN**):
  – Identified by the designation "**IN**" next to the valve seat. The valve flap is pointing towards the pocket in the valve seat.
- Outlet side (**EX**):
  – Identified by the designation "**EX**" next to the valve seat. The valve has the same orientation as the inlet valve.

➔ Install valve heads together with disc springs; mount disc springs with curvature uppermost.

➔ Centre valve head on the valve seat; valve head must lie flat inside the valve seat nose.

➔ Thread the square nut of the connection holder into the groove on the head cover and attach the screw.

➔ Mount the clamping claws.

➔ Gently insert the countersunk screws; correct their alignment on the valve heads as necessary.

➔ Tighten countersunk screws using a TX20 torx screwdriver, torque: **3 Nm**.

Changing the diaphragm

Attach the diaphragm key

➔ Loosen U-hose connection (hose connection to the opposite side of the pump);
  – do this by levering out the hose clamp with a flat-blade screwdriver and removing the hose.

➔ Undo 4 cylinder screws from the two head covers K and remove both head covers together with the valve heads and connections.

➔ Carefully raise the diaphragm at the side without causing it any damage; do not use sharp-edged tools.

➔ Slide diaphragm key under the diaphragm until it reaches the support disk.

➔ Use the diaphragm key to loosen the diaphragm support disk and unscrew together with diaphragm and diaphragm clamping disk.

➔ If the old diaphragm pair is difficult to separate from the diaphragm support disk 9, loosen in alcohol or petroleum.

NOTICE

Damage to the pump and bad ultimate pressure!

A changed dead centre (TDC) leads in the most unfavorable case to a bearing damage.

➔ Check for spacer disk D.

➔ Make sure that the original number is reassembled at the individual membrane head.

Installing the diaphragm

➔ **Assembling** is carried out in reverse order.

➔ Position new diaphragm 10 between diaphragm spring washer 3 with square head screw and diaphragm support washer 9; make sure that the square head screw is correctly seated in the guide hole of the diaphragm support disc.
  – Position diaphragm with pale side towards diaphragm spring washer.

➔ Raise the diaphragm at the side and carefully slide the diaphragm key through to the diaphragm support disk.

➔ Screw diaphragm spring washer, diaphragm, diaphragm support washer and spacers (if applicable) to connecting rod; optimum torque: **6 Nm**.
  – It is recommended to use a torque key, attach hex key to diaphragm key (hexagonal bolt 6 mm wide).

➔ Bring the diaphragms into a position in which they are in contact with the housing and centred with respect to the bore.

➔ Put on head cover K with valve heads and connections.

➔ Screw in the socket head screws diagonally first slightly, then tighten; maximum torque: **12 Nm**.

➔ Mount the U-hose and hose clamp; close the hose clamp with dimensioning tool.

➔ Install head cover hood and tighten screws using TX20 torx screwdriver.

➔ Tighten countersunk screws of connection holder using TX20 torx screwdriver.

➔ Close film hinge on the connection holder.

7.3 Replacing the device fuses

The safety fuses (PU E22 016 -T) are located in the terminal box and are integrated into a cable.

WARNING

Voltage-bearing elements

Danger to life from electric shock.

➔ The fuses can be changed only by trained and authorised electricians.

➔ Before opening the terminal box, switch off the pump and pull the power plug.

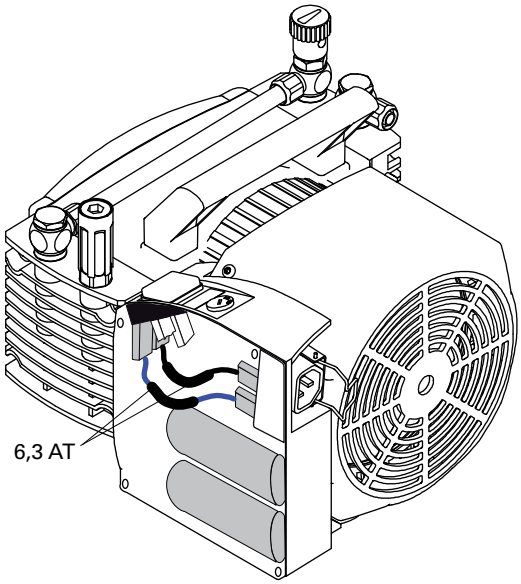

Fig. 13: Replacing the fuses

➔ Disconnect the drive motor from the mains and secure it so that it cannot be switched on.

➔ Wait for two minutes until the capacitors have discharged.

➔ Establish the cause of the fault and rectify before restarting.

➔ Open the terminal box lid.

➔ Remove the entire cable with integrated fuse from the flat pin bushing and replace.

➔ Remount the terminal box lid.

8 Decommissioning

8.1 Shutting down for longer periods

Before shutting down the pump, observe the following procedure and adequately protect the pump system against corrosion:

Shortly after condensate has formed:

➔ Let the vacuum pump continue to run for several minutes with the intake port open.
➔ Should media get into the pump which could corrode the pump materials or form deposits, clean and check the diaphragm heads.

In the long term:

➔ Carry out the measures described for brief shutdowns.
➔ Disconnect the pump from the equipment.
➔ Close the gas ballast valve, if existing.
➔ Close the inlet and outlet opening (e.g. with transport caps).
➔ Store the pump in a dry place.

9 Malfunctions

Please note the following instructions should the pump malfunction:

CAUTION
Hot surface! Danger of burns if hot parts are touched. The surface temperature of the pump may rise above 105 °C in case of malfunction. ➔ Carry out work on the pump only after it has cooled to a safe temperature.

9.1 Rectifying malfunctions

Problem	Possible causes	Remedy
Pump will not start up	No mains voltage or voltage does not correspond to the motor data	Check mains voltage and mains fuse protection; check motor switch
	Pump temperature too low	Warm up pump to > 12°C
	Thermal protection switch of the motor has responded	Detect and fix cause of overheating; allow pump to cool off if necessary.
	Phase failure	Check fuse
	Diaphragms or valves dirty	Clean pump*(siehe S. 15, Kap. 7)*
	Overpressure in the exhaust lead	Check exhaust lead
	One of the integrated fuses is defective	Check fuses and replace if necessary
Pump switches off after a while after being started	Thermal protection switch of the motor has responded	Detect and fix cause of overheating; allow pump to cool off if necessary.
	Mains fuse protection triggered due to overload (e.g. cold start)	Warm up pump
	Exhaust pressure too high	Check opening of exhaust line and exhaust accessories
Pump not achieving the ultimate pressure	Condensate in the pump	Operate pump for a longer period of time at atmospheric pressure; if necessary, open the gas ballast valve
	Gas ballast valve open	Close gas ballast valve
	Valves or diaphragms dirty or defective	Clean or change valves and diaphragms *(siehe S. 15, Kap. 7)*
	Leak in the system	Fix leak
Pumping speed of pump too low	Intake line not well-dimensioned	Keep connections as short as possible and see that cross-sections are sufficiently dimensioned
	Exhaust pressure too high	Check opening of exhaust line and exhaust accessories
Unusual noises during operation	Diaphragms or valves defective	Clean or change valves and diaphragms *(siehe S. 15, Kap. 7)*
	Suction chamber dirty	Clean suction chamber
	Silencer loose or missing	Check silencer; replace if necessary
	Valves dirty or defective	Clean or change valves and diaphragms *(siehe S. 15, Kap. 7)*
	Motor fan defective	Replace motor fan
	Connection rod or motor bearing defective	Contact Pfeiffer Vacuum Service

NOTICE

Service work should be carried out by a qualified person only!

Pfeiffer Vacuum is not liable for any damage to the pump resulting from work carried out improperly.

➔ Take advantage of our service training programs; additional information at www.pfeiffer-vacuum.com.

➔ Please state all the information on the pump rating plate when ordering spare parts.

10 Service

Pfeiffer Vacuum offers first-class service!

- Maintenance/repairs on the spot by Pfeiffer Vacuum field service
- Maintenance/repairs in the nearby service center or service point
- Fast replacement with exchange products in mint condition
- Advice on the most cost-efficient and quickest solution

Detailed information and addresses at: **www.pfeiffer-vacuum.com (Service)**.

Maintenance and repairs in the Pfeiffer Vacuum ServiceCenter

The following steps are necessary to ensure a fast, smooth servicing process:

➔ Download the forms "Service Request" and "Declaration on Contamination".[1)]
➔ Fill in the "Service Request" form and send it by fax or e-mail to your service address.
➔ Include the confirmation on the service request from Pfeiffer Vacuum with your shipment.
➔ Fill in the contamination declaration and enclose it in the shipment (required!).
➔ Dismantle all accessories.
➔ Send the pump in its original packaging if at all possible.

Sending of contaminated pumps or devices

No units will be accepted if they are contaminated with micro-biological, explosive or radioactive substances. “Hazardous substances” are substances and compounds in accordance with the hazardous goods directive (current version). If pumps are contaminated or the declaration on contamination is missing, Pfeiffer Vacuum performs decontamination at the shipper's expense.

➔ Neutralise the pump by flushing it with nitrogen or dry air.
➔ Close all openings airtight.
➔ Seal the pump or unit in suitable protective film.
➔ Return the pump/unit only in a suitable and sturdy transport container and send it in while following applicable transport conditions.

Service orders

All service orders are carried out exclusively according to our repair conditions for vacuum units and components.

1) Forms under www.pfeiffer-vacuum.com

11 Spare parts

Spare part package/ Spare parts	Pump type	No.	Pieces	consisting of the parts
Set of wearing parts	MVP 040-2	PU E22 013 -T	1	10, 11a, 11b, 12
	MVP 070-3	PU E22 014 -T	1	10, 11, 12, 14
	MVP 070-3C	PU E22 015 -T	1	10, 11, 12
Silencer	MVP 040-2	P 0920 412 E	1	2.1
	MVP 070-3		1	
Sealing ring	MVP 040-2	P 3529 143-C	1 (of 13)	2.3
Hose connection, complete	MVP 040-2	P 0920 542 E		
Hose, Polyethylene 10 x 8 mm	MVP 040-2	P 0988 088	1 m	
	MVP 070-3			
Gas ballast valve	MVP 040-2	P 0920 634 E	1	40
Set of fuses	MVP 040-2 MVP 070-3 MVP 070-3C	PU E22 016 -T	2	2 fuses 6.3 AT
Diaphragm key	MVP 070-3 MVP 070-3C	PK 050 186	1	

12 Accessories

Designation	MVP 040-2
Relay box, shielded, for backing pumps, 1-phase 7A for TC 110/120 and TCP 350, plug M8	PM 071 282 -X
Mains cable 115 / 230 V without plug, right angle IEC 320/C13 socket, 3 m	PK 050 111
Mains cable 230 V with safety plug CEE 7, right angle IEC 320/C13 socket, 2 m	PK 050 109
Mains cable 115 V with NEMA-plug, right angle IEC 320/C13 socket, 2 m	PK 050 110
Screw-in flange DN 16 ISO-KF / G1/4" incl. seal (for MVP 040-2, MVP 070-3 inlet/outlet)	PK 050 114 -T

Designation	MVP 070-3
Relay box, shielded, for backing pumps, 1-phase 7A for TC 110/120 and TCP 350, plug M8	PM 071 282 -X
Mains cable 115 / 230 V without plug, right angle IEC 320/C13 socket, 3 m	PK 050 111
Mains cable 230 V with safety plug CEE 7, right angle IEC 320/C13 socket, 2 m	PK 050 109
Mains cable 115 V with NEMA-plug, right angle IEC 320/C13 socket, 2 m	PK 050 110
Screw-in flange DN 16 ISO-KF / G1/4" incl. seal (for MVP 040-2, MVP 070-3 inlet/outlet)	PK 050 114 -T

Designation	MVP 070-3 C
Relay box, shielded, for backing pumps, 1-phase 7A for TC 110/120 and TCP 350, plug M8	PM 071 282 -X
Mains cable 115 / 230 V without plug, right angle IEC 320/C13 socket, 3 m	PK 050 111
Mains cable 230 V with safety plug CEE 7, right angle IEC 320/C13 socket, 2 m	PK 050 109
Mains cable 115 V with NEMA-plug, right angle IEC 320/C13 socket, 2 m	PK 050 110
Relay box, shielded, for backing pumps, 1-phase 7 A for TC 400/1200, TM 700 and TCP 350, M12	PM 071 284 -X

Further detailed accessories are contained in the Pfeiffer Vacuum printed or Online Catalogue.

13 Technical data and dimensions

13.1 General

Conversion table: pressure units

	mbar	bar	Pa	hPa	kPa	Torr mm Hg
mbar	1	$1 \cdot 10^{-3}$	100	1	0.1	0.75
bar	1000	1	$1 \cdot 10^{5}$	1000	100	750
Pa	0.01	$1 \cdot 10^{-5}$	1	0.01	$1 \cdot 10^{-3}$	$7.5 \cdot 10^{-3}$
hPa	1	$1 \cdot 10^{-3}$	100	1	0.1	0.75
kPa	10	0.01	1000	10	1	7.5
Torr mm Hg	1.33	$1.33 \cdot 10^{-3}$	133.32	1.33	0.133	1
1 Pa = 1 N/m^2						

Conversion table: gas throughput units

	mbar·l/s	Pa·m^3/s	sccm	Torr·l/s	atm·cm^3/s
mbar·l/s	1	0.1	59.2	0.75	0.987
Pa·m^3/s	10	1	592	7.5	9.87
sccm	$1.69 \cdot 10^{-2}$	$1.69 \cdot 10^{-3}$	1	$1.27 \cdot 10^{-2}$	$1.67 \cdot 10^{-2}$
Torr·l/s	1.33	0.133	78.9	1	1.32
atm·cm^3/s	1.01	0.101	59.8	0.76	1

13.2 Technical data

MVP 040-2

Parameter	MVP 040-2
Flange (in)	G 1/4" elbow union with enclosed hose 10/8, 1000 mm with an elbow union in G 1/4" at the end
Flange (out)	G 1/4" + silencer
Pumping speed at 50 Hz	2.3 m^3/h
Pumping speed at 60 Hz	2.5 m^3/h
Ultimate pressure with gas ballast	5 hPa
Ultimate pressure without gas ballast	4 hPa
Intake pressure max.	1100 hPa
Exhaust pressure, max.	1100 hPa
Rotation speed at 50 Hz	1500 min^{-1}
Rotation speed at 60 Hz	1800 min^{-1}
Leak rate	$2 \cdot 10^{-3}$ Pa m^3/s
Emission sound pressure level without gas ballast	≤ 53 dB (A)
Ambient temperature	12-40 °C
Protection category	IP 40
Mains requirement: voltage 50 Hz	100-115; 200-230 V
Mains requirement: voltage 60 Hz	100-115; 120; 200-230 V
Switch	Yes
Current consumption	3.4 A
Altitude of site, max	2000 m
Weight	11.4 kg
Cooling method, standard	Air

MVP 070-3/-3C

Parameter	MVP 070-3	MVP 070-3 C
Flange (in)	G 1/4" elbow union with enclosed hose 10/8, 1000 mm with an elbow union in G 1/4" at the end	DN 16 ISO-KF
Flange (out)	G 1/4" + silencer	Hose nipple 10
Pumping speed at 50 Hz	3.8 m^3/h	3.4 m^3/h
Pumping speed at 60 Hz	4.3 m^3/h	3.8 m^3/h
Ultimate pressure with gas ballast		3.0 hPa
Ultimate pressure without gas ballast	1.0 hPa	1.5 hPa
Intake pressure max.	1100 hPa	1100 hPa
Exhaust pressure, max.	1100 hPa	1100 hPa
Rotation speed at 50 Hz	1500 min^{-1}	1500 min^{-1}
Rotation speed at 60 Hz	1800 min^{-1}	1800 min^{-1}
Leak rate	$2 \cdot 10^{-3}$ Pa m^3/s	$2 \cdot 10^{-3}$ Pa m^3/s
Emission sound pressure level without gas ballast	≤ 55 dB (A)	≤ 50 dB (A)
Ambient temperature	12-40 °C	12-40 °C
Protection category	IP 40	IP 40
Mains requirement: voltage 50 Hz	100-115; 200-230 V	100-115; 200-230 V
Mains requirement: voltage 60 Hz	100-115; 120; 200-230 V	100-115; 120; 200-230 V
Switch	Yes	Yes
Current consumption	5.7 A	5.7 A
Altitude of site, max	2000 m	2000 m
Weight	16.4 kg	14.3 kg
Cooling method, standard	Air	Air

13.3 Dimensions

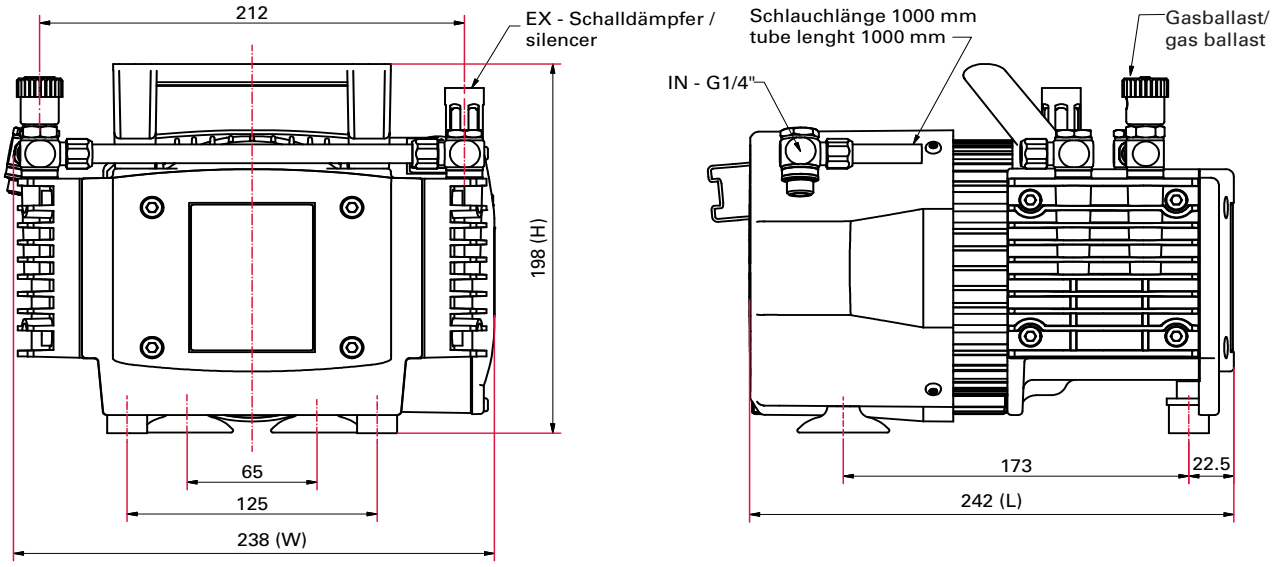

Fig. 14: MVP 040-2

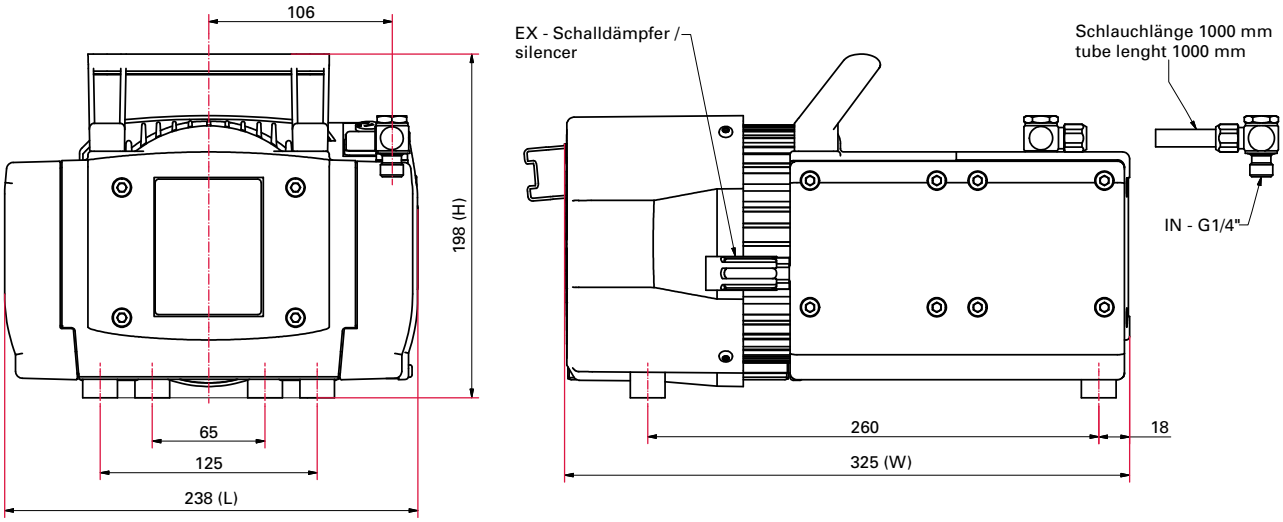

Fig. 15: MVP 070-3

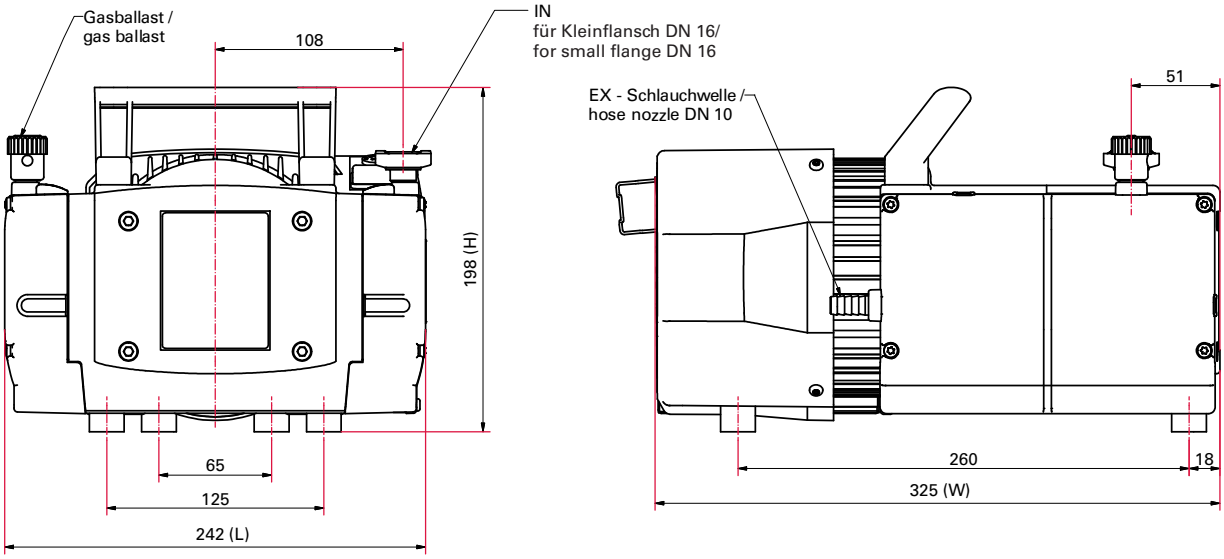

Fig. 16: MVP 070-3C

13.4 Substances in contact with the media

MVP 040-2, MVP 070-3	MVP 070-3C
Aluminium, FPM, PE	PTFE (carbon fibre reinforced), ETFE-CF, FFKM, ECTFE-CF

Declaration of conformity

We hereby declare that the product cited below satisfies all relevant provisions according to the following **EC directives**:

- **Machinery 2006/42/EC (Annex II, no. 1 A)**
- **Electromagnetic Compatibility 2014/30/EU**
- **Restriction of the use of certain Hazardous Substances 2011/65/EU**

The agent responsible for compiling the technical documentation is Mr. Sebastian Oberbeck, Pfeiffer Vacuum GmbH, Berliner Straße 43, 35614 Aßlar.

MVP 040-2, MVP 070-3/3C

Harmonised standards and national standards and specifications which have been applied:

DIN EN ISO 12100 : 2011	DIN EN 61010-1 : 2011	DIN EN 61326-1 : 2013
DIN EN 1012-2 : 2011	IEC 61010-1 : 2010 (Ed. 3)	DIN EN 50581 : 2013

Signature:

Pfeiffer Vacuum GmbH
Berliner Straße 43
35614 Asslar
Germany

(Dr. Ulrich von Hülsen)
Managing Director

2016-03-02

PFEIFFER VACUUM

VACUUM SOLUTIONS FROM A SINGLE SOURCE

Pfeiffer Vacuum stands for innovative and custom vacuum solutions worldwide, technological perfection, competent advice and reliable service.

COMPLETE RANGE OF PRODUCTS

From a single component to complex systems:
We are the only supplier of vacuum technology that provides a complete product portfolio.

COMPETENCE IN THEORY AND PRACTICE

Benefit from our know-how and our portfolio of training opportunities!
We support you with your plant layout and provide first-class on-site service worldwide.

Are you looking for a perfect vacuum solution? Please contact us:

Pfeiffer Vacuum GmbH
Headquarters • Germany
T +49 6441 802-0
info@pfeiffer-vacuum.de

www.pfeiffer-vacuum.com

PFEIFFER VACUUM