A652-01-880
Issue V Original

# Instruction Manual

## RV3, RV5, RV8 and RV12 Rotary Vane Pumps

*A 65X-YY-ZZZ*

| *Pump Type* | *Variant* | *Motor Description* |
|---|---|---|
| *X* | *YY* | *ZZZ* |
| *2 = RV3* | *01 to 99* | *903 = 220-240 V, 50/60 Hz, Single phase* |
| *3 = RV5* | | *904 = 100/200 V, 50/60 Hz, Single phase* |
| *4 = RV8* | | *905 = 200-230/380-460 V, 50/60 Hz, Three phase* |
| *5 = RV12* | | *906 = 110-115/120 V 50/60 Hz, Single phase* |
| | | *965 = NEMA Bareshaft* |
| | | *970 = ISO Bareshaft* |

EDWARDS

WWW.EDWARDSVACUUM.COM

# Declaration of Conformity

We, Edwards Limited,
Crawley Business Quarter,
Manor Royal,
Crawley,
West Sussex, RH10 9LW, UK

declare under our sole responsibility, as manufacturer and person within the EU authorised to assemble the technical file, that the product(s)

RV Rotary Vacuum pumps:

A65X – YY – ZZZ

| Pump type | Variant | Motor description |
|---|---|---|
| X | YY | ZZZ |
| 2 = RV3 | 01 to 99 | 903 = 220-240V, 50/60Hz, Single phase |
| 3 = RV5 | | 904 = 100/200V, 50/60Hz, Single phase |
| 4 = RV8 | | 905 = 200-230/380-460V, 50/60Hz, Three phase |
| 5 = RV12 | | 906 = 110-115/120, 50/60Hz, Single phase |

to which this declaration relates is in conformity with the following standard(s) or other normative document(s)

| | |
|---|---|
| EN1012-2:1996+A1:2009 | Compressors and Vacuum Pumps. Safety Requirements. Vacuum Pumps |
| EN61010-1:2010* | Safety Requirements for Electrical Equipment for Measurement, Control and Laboratory Use. General Requirements |
| EN60034-1:2010 | Rotating electrical machines. Rating and performance |
| CAN/CSA-C22.2 No.77-2014# | Motors with inherent overheating protection |
| CAN/CSA-C22.2 No.100-2014# | Motors and Generators |
| C22.2 61010-1-04:2004 | Safety requirements for electrical equipment for measurement, Control and laboratory use – Part 1: General requirements |
| UL61010-1, 2nd Edition | Safety requirements for electrical equipment for measurement, Control and laboratory use – Part 1: General requirements |
| UL1004: 1994-1, 2nd Edition | Electric Motors |
| EN50581:2012 | Technical Documentation for the Assessment of Electrical and Electronic Products with respect to the Restriction of Hazardous Substances |
| ** 1-phase pumps only* | *The pumps comply with EN 61010-1 when installed in accordance with the instruction manual supplied with the pumps.* |
| *# 1-phase pumps only.* | *Canadian Standards Authority and Underwriters Laboratory.* |

and fulfils all the relevant provisions of

| | |
|---|---|
| 2006/42/EC | Machinery Directive |
| 2014/35/EU | Low Voltage Directive |
| 2011/65/EU | Restriction of Certain Hazardous Substances (RoHS) Directive |

*Note: This declaration covers all product serial numbers from the date this Declaration was signed onwards.*

*Mr Peter Meares*
*Senior Technical Support Manager, General Vacuum*

10.08.2015, Burgess Hill
*Date and Place*

*This product has been manufactured under a quality management system certified to ISO 9001:2008*

*P200-00-540 Issue J*

# Contents

## Section Page


1 Introduction ..... 1

1.1 Scope and definitions ..... 1
1.2 ATEX directive implications ..... 2
1.3 Description ..... 4
1.4 Performance modes and controls ..... 4
1.4.1 Mode selector ..... 4
1.4.2 Gas-ballast control ..... 5
1.5 Construction ..... 5

2 Technical data ..... 7

2.1 Operating and storage conditions ..... 7
2.2 Performance ..... 7
2.2.1 General ..... 7
2.2.2 Performance characteristics ..... 11
2.3 Mechanical data ..... 12
2.4 Noise and vibration data ..... 12
2.5 Lubrication data ..... 12
2.6 Electrical data: single-phase pumps ..... 14
2.7 Electrical data: three-phase pumps ..... 15

3 Installation ..... 17

3.1 Safety ..... 17
3.2 System design considerations ..... 17
3.3 Unpack and inspect ..... 18
3.4 Locate the pump ..... 18
3.5 Fill the pump with oil ..... 18
3.6 Fit the motor (bareshaft pumps only) ..... 19
3.7 Electrical installation: single-phase pumps ..... 19
3.7.1 Check and configure the motor ..... 19
3.7.2 Connect the pump to the electrical supply ..... 19
3.7.3 Check the direction of rotation ..... 20
3.8 Electrical installation: three-phase pumps ..... 22
3.8.1 Check and configure the motor ..... 22
3.8.2 Connect the pump to the local electrical supply ..... 22
3.8.3 Check the direction of rotation ..... 24
3.9 Inlet and outlet connections ..... 24
3.10 Leak-test the system ..... 25

4 Operation ..... 27

4.1 ATEX directive implications ..... 27
4.1.1 Introduction ..... 27
4.1.2 Flammable/pyrophoric materials ..... 27
4.1.3 Gas purges ..... 28
4.2 How to use the pump controls ..... 28
4.2.1 Introduction ..... 28
4.2.2 Mode selector ..... 29
4.2.3 Gas-ballast control ..... 29
4.3 Start-up procedure ..... 30
4.4 To achieve ultimate vacuum ..... 30
4.5 To pump condensable vapours ..... 31
4.6 To decontaminate the oil ..... 31


cg/08/13

© Edwards Limited 2013. All rights reserved.
Edwards and the Edwards logo are trade marks of Edwards Limited.

Contents

4.7 Unattended operation ..... 31
4.8 Shut-down ..... 32

5 Maintenance ..... 33

5.1 Safety information ..... 33
5.2 Maintenance plan ..... 34
5.3 Check the oil-level ..... 34
5.4 Replace the oil ..... 35
5.5 Inspect and clean the inlet-filter ..... 35
5.6 Inspect and clean the gas-ballast control ..... 36
5.7 Clean the oil-level sight-glass ..... 37
5.8 Clean the motor fan-cover and enclosure ..... 38
5.9 Clean and overhaul the pump ..... 38
5.10 Fit new blades ..... 38
5.11 Test the motor condition ..... 38
5.12 Fault-finding ..... 38
5.12.1 Introduction ..... 38
5.12.2 The pump has failed to start ..... 38
5.12.3 The pump has failed to achieve the specified performance (has failed to reach ultimate vacuum) ..... 39
5.12.4 The pump is noisy ..... 39
5.12.5 The pump surface temperature is above 100°C ..... 39
5.12.6 The vacuum is not fully maintained after the pump is switched off ..... 39
5.12.7 The pumping speed is poor ..... 40
5.12.8 There is an external oil leak ..... 40

6 Storage and disposal ..... 41

6.1 Storage ..... 41
6.2 Disposal ..... 41

7 Service and spares ..... 43

7.1 Introduction ..... 43
7.2 Service ..... 43
7.3 Spares ..... 43
7.4 Accessories ..... 45
7.4.1 Introduction ..... 45
7.4.2 Inlet catchpot ..... 45
7.4.3 Inlet dust filter ..... 45
7.4.4 Inlet desiccant trap ..... 45
7.4.5 Inlet chemical trap ..... 46
7.4.6 Foreline trap ..... 46
7.4.7 Outlet mist filter ..... 46
7.4.8 Gas-ballast adaptor ..... 46
7.4.9 Gravity oil drain kit ..... 46
7.4.10 Oil drain-extension ..... 46
7.4.11 Exhaust nozzle kit ..... 46
7.4.12 Vibration isolators ..... 46
7.4.13 Solenoid operated gas-ballast valve ..... 46
7.4.14 Solenoid operated pipeline valve ..... 46

8 PFPE-prepared RV pumps ..... 49

8.1 Summary ..... 49
8.2 Installation ..... 49
8.3 Operation ..... 49
8.4 Maintenance ..... 49

9 Bareshaft RV pumps ..... 51

9.1 Description ..... 51


© Edwards Limited 2013. All rights reserved.
Edwards and the Edwards logo are trade marks of Edwards Limited.

9.2 Fit the motor to the bareshaft pump ..... 51

For return of equipment, complete the HS Forms at the end of this manual.

# Illustrations

## Figure — Page

1 The RV pump ..... 3
2 Performance characteristics in High Vacuum mode (pumping speed against inlet pressure) ..... 11
3 Dimensions (mm) ..... 13
4 Motor voltage configuration: single-phase pumps ..... 21
5 Three-phase electrical connections: 200–230 V ..... 23
6 Three-phase electrical connections: 380–460 V ..... 23
7 Inlet-filter assembly ..... 35
8 Gas-ballast control assembly ..... 36
9 Sight-glass assembly ..... 37
10 Accessories ..... 47
11 Fit the motor to a bareshaft pump ..... 52

# Tables

## Table — Page

1 Operating and storage conditions ..... 7
2 General performance data ..... 7
3 Performance data: High Vacuum mode ..... 8
4 Performance data: High Throughput mode ..... 9
5 Performance characteristics ..... 10
6 Mechanical data ..... 12
7 Noise and vibration data ..... 12
8 Lubrication data ..... 12
9 Electrical data (single-phase pumps with Item Numbers -903 or -906) ..... 14
10 Electrical data (single-phase pumps with Item Numbers -904) ..... 14
11 Electrical data (three-phase pumps with Item Numbers -905) ..... 15
12 Maintenance plan ..... 34
13 Spares and maintenance kits ..... 44
14 Accessory item numbers ..... 45

# Associated publications

| Publication title | Publication number |
|---|---|
| Vacuum pump and vacuum system safety | P400-40-100 |

# Trademark credits

Fomblin® is a registered trademark of Ausimont SpA.

© Edwards Limited 2013. All rights reserved.
Edwards and the Edwards logo are trade marks of Edwards Limited.

This page has been intentionally left blank.


© Edwards Limited 2013. All rights reserved.
Edwards and the Edwards logo are trade marks of Edwards Limited.

# 1 Introduction

## 1.1 Scope and definitions

This manual provides installation, operation and maintenance instructions for the Edwards RV3, RV5, RV8 and RV12 Rotary Vane Pumps. The pump must be used as specified in this manual.

Read this manual before installing and operating the pump. Important safety information is highlighted as WARNING and CAUTION instructions; these instructions must be obeyed. The use of WARNINGS and CAUTIONS is defined below.

*WARNING*

**Warnings are given where failure to observe the instruction could result in injury or death to people.**

*CAUTION*

**Cautions are given where failure to observe the instruction could result in damage to the equipment, associated equipment and process.**

The units used throughout this manual conform to the SI international system of units of measurement.

In accordance with the recommendations of IEC1010, the following warning labels are on the pump:

Warning – refer to accompanying documentation.

Warning – risk of electric shock.

Warning – hot surfaces.

© Edwards Limited 2013. All rights reserved.
Edwards and the Edwards logo are trade marks of Edwards Limited.

## 1.2 ATEX directive implications

- This equipment is designed to meet the requirements of Group II Category 3 equipment in accordance with Directive 94/9/EC of the European Parliament and the Council of 23rd March 1994 on the approximation of the laws of the Member States concerning equipment and protective systems intended for use in potentially explosive atmospheres. (The ATEX Directive).

The ATEX Category 3 applies in respect of potential ignition sources internal to the equipment. An ATEX Category has not been assigned in respect of potential ignition sources on the outside of the equipment as the equipment has not been designed for use where there is an external potentially explosive atmosphere.

There is no potential source of ignition within the pump during normal operation but there may be potential sources of ignition under conditions of predicted and rare malfunction as defined in the Directive. Accordingly, although the pump is designed to pump flammable materials and mixtures, operating procedures should ensure that under all normal and reasonably predicted conditions, these materials and mixtures are not within explosive limits. Category 3 is considered appropriate for the avoidance of ignition in the case of a rare malfunction which allows flammable materials or mixtures to pass through the pump while within their explosive limits.

- When flammable or pyrophoric materials are present within the equipment:
  - Do not allow air to enter the equipment.
  - Ensure that the system is leak tight.
- For further information, please contact Edwards: refer to the Addresses page at the end of this manual for details.


© Edwards Limited 2013. All rights reserved.
Edwards and the Edwards logo are trade marks of Edwards Limited.

**Figure 1 - The RV pump**

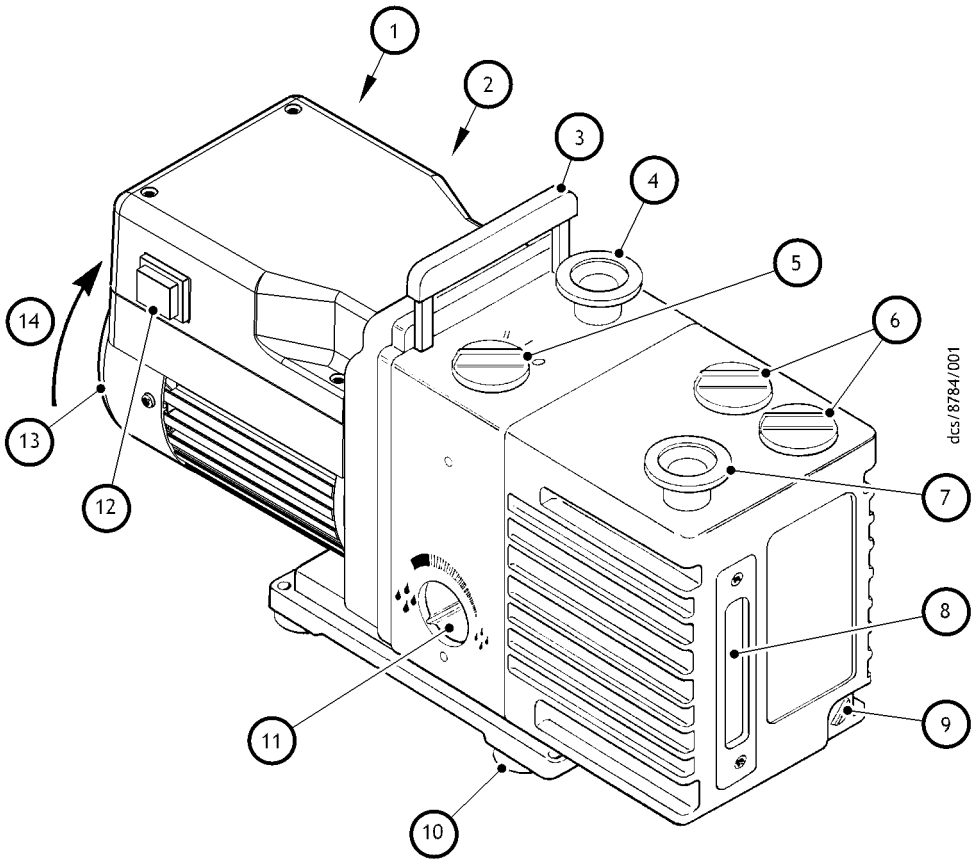


1. Electrical inlet-connector
2. Voltage indicator
3. Lifting handle*
4. NW25 inlet-port
5. Gas-ballast control
6. Oil filler-plug
7. NW25 outlet-port
8. Oil-level sight-glass
9. Oil drain-plug
10. Rubber feet (4 off)
11. Mode selector
12. On-off switch†
13. Motor fan-cover
14. Correct direction of rotation

* *RV3 and RV5 pumps only; a lifting bracket is fitted to RV8 and RV12 pumps.*

† *Single-phase pumps only.*

*Note:* *Single-phase RV3/RV5 pump shown.*

© Edwards Limited 2013. All rights reserved.
Edwards and the Edwards logo are trade marks of Edwards Limited.

## 1.3 Description

The Edwards RV rotary vane pump is shown in Figure 1. Refer to Figure 1 for item numbers in brackets in the following descriptions. The RV pumps are two-stage, oil-sealed, sliding-vane vacuum pumps. The pump has NW25 inlet (4) and outlet (7) ports, a gas-ballast control (5) and a mode selector (11). When the pump is switched off, an inlet-valve seals the inlet and prevents the suck-back of air and oil into the vacuum system.

The RV3 and RV5 pumps have a retractable lifting handle (3). The RV8 and the RV12 pumps are fitted with a lifting bracket for use with suitable lifting equipment.

An oil-pump delivers pressurised oil to the vacuum pumping mechanism in the RV pump. The oil level and condition can be inspected in the oil-box through a sight-glass (8). Two oil filler-plugs (6) and an oil drain-plug (9) are provided on the oil-box.

The pump mechanism is driven directly by a single-phase or three-phase electric motor through a flexible motor-coupling. The motor is totally enclosed and is cooled by the motor cooling-fan which directs air along the motor fins. The pumps are cooled by an additional fan attached to the motor-coupling.

Single-phase motors are fitted with an on/off switch (12) and a thermal overload device. When the motor is too hot, the thermal overload device switches off the pump. The thermal overload device has an automatic reset; when the motor cools down, the device resets and (unless suitable control equipment has been incorporated which must be manually reset: see Section 3.7.2 and Section 3.8.2), the motor will restart.

As of the end of 2009 improved motors have been fitted to RV pumps. These motors benefit from being fitted with an aluminium terminal box and externally accessible voltage change-over switches. The introduction of these motors has resulted in the range of motors covering all voltage and frequency conditions being reduced from four variants to two. All motors are interchangeable and pump performance is not affected.

The pump is mounted on a base plate on rubber feet (10). Details of suitable vibration isolators and other accessories are provided in Section 7.

Refer to Section 8 for additional information if the pump is PFPE-prepared.

## 1.4 Performance modes and controls

The pump has two controls: the mode selector (11) and the gas-ballast control (5). Six possible combinations of these controls allow for a wide choice of operating characteristics to optimise the performance of the pump for a given application.

### 1.4.1 Mode selector

The mode selector has two positions; refer to Section 4.2 to select these positions. Throughout the rest of this manual, the following convention is used:

- The High Vacuum mode is specified by the ♠ symbol.
- The High Throughput mode is specified by the ♠ symbol.

With the mode selector set to High Vacuum mode ♠, pressurised oil is fed to the low vacuum stage only. In this mode of operation, the pump provides the best possible ultimate vacuum.

With the mode selector set to High Throughput mode ♠, pressurised oil is fed to the high vacuum and low vacuum stages. In this mode of operation, the pump can sustain long-term high inlet pressures.


© Edwards Limited 2013. All rights reserved.
Edwards and the Edwards logo are trade marks of Edwards Limited.

### 1.4.2 Gas-ballast control

To pump high vapour loads, gas-ballast is delivered into the pump to prevent condensation of the vapour carried by the pumped gases.

Air can be introduced to the low vacuum stage through the gas-ballast valve. Alternatively, an inert gas such as nitrogen can be supplied through a suitable external valve.

The gas-ballast control has three positions:

- Closed (position ‘0’)
- Low flow (position ‘I’)
- High flow (position ‘II’).

## 1.5 Construction

The pump-shafts and rotors are made of high-grade cast-iron. The pump-body and oil-box are made from cast-aluminium. All surfaces of the pump which are exposed to the pumped gases are free from copper, zinc and cadmium.

Other materials of construction include fluorocarbon elastomer, nitrile, silicon, chemically-resistant polymers, nickel and stainless steel.

© Edwards Limited 2013. All rights reserved.
Edwards and the Edwards logo are trade marks of Edwards Limited.

This page has been intentionally left blank.


© Edwards Limited 2013. All rights reserved.
Edwards and the Edwards logo are trade marks of Edwards Limited.

# 2 Technical data

*Note: To comply with EN 61010 and CSA standards, the pump must be installed and used indoors, and within the operating conditions specified in Table 1 below.*

## 2.1 Operating and storage conditions

**Table 1 - Operating and storage conditions**

| Parameter | Reference data |
|---|---|
| Ambient temperature range (operation) | 12 to 40°C |
| Ambient temperature range (storage) | –30 to 70°C |
| Normal surface temperature of the pump-body * | 50 to 70°C |
| Maximum humidity (operation) | 90% RH |
| Maximum altitude (operation) | 2000 m |
| Pollution degree | 2 |
| Installation category | II |

** At ultimate vacuum, with ambient temperature of 20°C.*

## 2.2 Performance

### 2.2.1 General

*Note: In Table 2 and Table 3, total pressures have been measured by a capacitance diaphragm gauge on a vacuum chamber without a cold trap, as specified by Pneurop Standard 6602 (1979).*

**Table 2 - General performance data**

| Parameter | Reference data | | | |
|---|---|---|---|---|
| High Vacuum mode ♦ performance | See Table 3 | | | |
| High Throughput mode ♦ performance | See Table 4 | | | |
| Suckback protection | $1 \times 10^{-5}$ mbar l $s^{-1}$, $1 \times 10^{-3}$ Pa l $s^{-1}$ | | | |
| Maximum initial pressure rise with no gas-ballast flow | $1 \times 10^{-1}$ mbar, 10 Pa | | | |
| | **RV3** | **RV5** | **RV8** | **RV12** |
| Maximum displacement: $m^3$ $h^{-1}$ | | | | |
| 50 Hz electrical supply | 3.7 | 5.8 | 9.7 | 14.2 |
| 60 Hz electrical supply | 4.5 | 5.0 | 11.7 | 17.0 |
| Maximum pumping speed (Pneurop 6602, 1979): $m^3$ $h^{-1}$ | | | | |
| 50 Hz electrical supply | 3.3 | 5.1 | 8.5 | 12.0 |
| 60 Hz electrical supply | 3.9 | 6.2 | 10.0 | 14.2 |
| Maximum permitted inlet pressure and gas-ballast inlet pressure | | | | |
| bar gauge | 0.5 | 0.5 | 0.5 | 0.5 |
| Pa | $1.5 \times 10^5$ | $1.5 \times 10^5$ | $1.5 \times 10^5$ | $1.5 \times 10^5$ |
| Maximum permitted outlet pressure | | | | |
| bar gauge | 0.2 | 0.2 | 0.2 | 0.2 |
| Pa | $0.2 \times 10^5$ | $0.2 \times 10^5$ | $0.2 \times 10^5$ | $0.2 \times 10^5$ |

© Edwards Limited 2013. All rights reserved.
Edwards and the Edwards logo are trade marks of Edwards Limited.

**Table 3 - Performance data: High Vacuum mode**

| HIGH VACUUM MODE ♦ | | | | | | | | | |
|---|---|---|---|---|---|---|---|---|---|
| **Parameter** | **Units** | **RV3** | | **RV5** | | **RV8** | | **RV12** | |
| | | **1-phase** | **3-phase** | **1-phase** | **3-phase** | **1-phase** | **3-phase** | **1-phase** | **3-phase** |
| Gas-ballast control closed (position ‘0’) | | | | | | | | | |
| Ultimate total pressure | mbar | $2 \times 10^{-3}$ | | $2 \times 10^{-3}$ | | $2 \times 10^{-3}$ | | $2 \times 10^{-3}$ | |
| | Pa | $2 \times 10^{-1}$ | | $2 \times 10^{-1}$ | | $2 \times 10^{-1}$ | | $2 \times 10^{-1}$ | |
| Gas-ballast control low flow (position ‘I’) | | | | | | | | | |
| Ultimate total pressure | mbar | $3 \times 10^{-2}$ | | $3 \times 10^{-2}$ | | $3 \times 10^{-2}$ | | $3 \times 10^{-2}$ | |
| | Pa | 3 | | 3 | | 3 | | 3 | |
| Gas-ballast flow | $l\ min^{-1}$ | 5 | | 5 | | 5 | | 5 | |
| Maximum water vapour pumping rate | $kg\ h^{-1}$ | 0.06 | 0.04 | 0.06 | 0.04 | 0.06 | 0.04 | 0.06 | 0.04 |
| Maximum water vapour inlet pressure | mbar | 27 | 18 | 16 | 11 | 10 | 7 | 7 | 5 |
| | Pa | $2.7 \times 10^{3}$ | $1.8 \times 10^{3}$ | $1.6 \times 10^{3}$ | $1.1 \times 10^{3}$ | $1 \times 10^{3}$ | $7 \times 10^{2}$ | $7 \times 10^{2}$ | $5 \times 10^{2}$ |
| Gas-ballast control high flow (position ‘II’) | | | | | | | | | |
| Ultimate total pressure | mbar | $1.2 \times 10^{-1}$ | | $1 \times 10^{-1}$ | | $6 \times 10^{-2}$ | | $6 \times 10^{-2}$ | |
| | Pa | $1.2 \times 10^{1}$ | | $1 \times 10^{1}$ | | 6 | | 6 | |
| Gas-ballast flow | $l\ min^{-1}$ | 14 | | 14 | | 16 | | 16 | |
| Maximum water vapour pumping rate | $kg\ h^{-1}$ | 0.22 | 0.12 | 0.22 | 0.12 | 0.22 | 0.20 | 0.29 | 0.25 |
| Maximum water vapour inlet pressure | mbar | 80 | 54 | 50 | 32 | 38 | 34 | 32 | 28 |
| | Pa | $8 \times 10^{3}$ | $5.4 \times 10^{3}$ | $5 \times 10^{3}$ | $3.2 \times 10^{3}$ | $3.8 \times 10^{3}$ | $3.4 \times 10^{3}$ | $3.2 \times 10^{3}$ | $2.8 \times 10^{3}$ |



© Edwards Limited 2013. All rights reserved.
Edwards and the Edwards logo are trade marks of Edwards Limited.

**Table 4 - Performance data: High Throughput mode**

| HIGH THROUGHPUT MODE ♦ | | | | | | | | | |
|---|---|---|---|---|---|---|---|---|---|
| **Parameter** | **Units** | **RV3** | | **RV5** | | **RV8** | | **RV12** | |
| | | **1-phase** | **3-phase** | **1-phase** | **3-phase** | **1-phase** | **3-phase** | **1-phase** | **3-phase** |
| Gas-ballast control closed (position ‘0’) | | | | | | | | | |
| Ultimate total pressure | mbar | $3 \times 10^{-2}$ | | $3 \times 10^{-2}$ | | $3 \times 10^{-2}$ | | $3 \times 10^{-2}$ | |
| | Pa | 3 | | 3 | | 3 | | 3 | |
| Gas-ballast control low flow (position ‘I’) | | | | | | | | | |
| Ultimate total pressure | mbar | $6 \times 10^{-2}$ | | $6 \times 10^{-2}$ | | $4 \times 10^{-2}$ | | $4 \times 10^{-2}$ | |
| | Pa | 6 | | 6 | | 4 | | 4 | |
| Gas-ballast flow | $l\ min^{-1}$ | 5 | | 5 | | 5 | | 5 | |
| Maximum water vapour pumping rate | $kg\ h^{-1}$ | 0.06 | 0.04 | 0.06 | 0.04 | 0.06 | 0.04 | 0.06 | 0.04 |
| Maximum water vapour inlet pressure | mbar | 27 | 18 | 16 | 11 | 10 | 7 | 7 | 5 |
| | Pa | $2.7 \times 10^{3}$ | $1.8 \times 10^{3}$ | $1.6 \times 10^{3}$ | $1.1 \times 10^{3}$ | $1 \times 10^{3}$ | $7 \times 10^{2}$ | $7 \times 10^{2}$ | $5 \times 10^{2}$ |
| Gas-ballast control high flow (position ‘II’) | | | | | | | | | |
| Ultimate total pressure | mbar | $1.2 \times 10^{-1}$ | | $1 \times 10^{-1}$ | | $6 \times 10^{-2}$ | | $6 \times 10^{-2}$ | |
| | Pa | $1.2 \times 10^{1}$ | | $1 \times 10^{1}$ | | 6 | | 6 | |
| Gas-ballast flow | $l\ min^{-1}$ | 14 | | 14 | | 16 | | 16 | |
| Maximum water vapour pumping rate | $kg\ h^{-1}$ | 0.22 | 0.12 | 0.22 | 0.12 | 0.22 | 0.20 | 0.29 | 0.25 |
| Maximum water vapour inlet pressure | mbar | 80 | 54 | 50 | 32 | 38 | 34 | 32 | 28 |
| | Pa | $8 \times 10^{3}$ | $5.4 \times 10^{3}$ | $5 \times 10^{3}$ | $3.2 \times 10^{3}$ | $3.8 \times 10^{3}$ | $3.4 \times 10^{3}$ | $3.2 \times 10^{3}$ | $2.8 \times 10^{3}$ |



© Edwards Limited 2013. All rights reserved.
Edwards and the Edwards logo are trade marks of Edwards Limited.

# Technical data

**Table 5 - Performance characteristics**

| MODE SELECTOR POSITION | GAS BALLAST CONTROL | | | | | |
|---|---|---|---|---|---|---|
| | **Closed (position '0')** | | **Low flow (position 'I')** | | **High flow (position 'II')** | |
| High Vacuum mode ♦ | Ultimate total pressure | | Ultimate total pressure | | Ultimate total pressure | |
| | mbar | Pa | mbar | Pa | mbar | Pa |
| | $2 \times 10^{-3}$ | $2 \times 10^{-1}$ | $3 \times 10^{-2}$ | 3 | $1.2 \times 10^{-1}$ (RV3)<br>$1.0 \times 10^{-1}$ (RV5)<br>$6 \times 10^{-2}$ (RV8/12) | $1.2 \times 10^{1}$ (RV3)<br>$1.0 \times 10^{1}$ (RV5)<br>6.0 (RV8/12) |
| | Use for the best ultimate pressure | | Maximum water vapour pumping rate | | Maximum water vapour pumping rate | |
| | | | 1-phase pumps | 3-phase pumps | 1-phase pumps | 3-phase pumps |
| | | | 0.06 kg $h^{-1}$ | 0.04 kg $h^{-1}$ | 0.22 kg $h^{-1}$ (RV3/5/8)<br>0.29 kg $h^{-1}$ (RV12) | 0.12 kg $h^{-1}$ (RV3/5)<br>0.20 kg $h^{-1}$ (RV8)<br>0.25 kg $h^{-1}$ (RV12) |
| High Throughput mode ♦ | Ultimate total pressure | | Ultimate total pressure | | Ultimate total pressure | |
| | mbar | Pa | mbar | Pa | mbar | Pa |
| | $3 \times 10^{-2}$ | 3 | $6 \times 10^{-2}$ (RV3/5)<br>$4 \times 10^{-2}$ (RV8/12) | 6 (RV3/5)<br>4 (RV8/12) | $1.2 \times 10^{-1}$ (RV3)<br>$1.0 \times 10^{-1}$ (RV5)<br>$6 \times 10^{-2}$ (RV8/12) | $1.2 \times 10^{1}$ (RV3)<br>$1.0 \times 10^{1}$ (RV5)<br>6.0 (RV8/12) |
| | Use for continuous inlet pressure above 50 mbar/$5 \times 10^{3}$ Pa | | Maximum water vapour pumping rate | | Maximum water vapour pumping rate | |
| | | | 1-phase pumps | 3-phase pumps | 1-phase pumps | 3-phase pumps |
| | | | 0.06 kg $h^{-1}$ | 0.04 kg $h^{-1}$ | 0.22 kg $h^{-1}$ (RV3/5/8)<br>0.29 kg $h^{-1}$ (RV12) | 0.12 kg $h^{-1}$ (RV3/5)<br>0.20 kg $h^{-1}$ (RV8)<br>0.25 kg $h^{-1}$ (RV12) |



© Edwards Limited 2013. All rights reserved.
Edwards and the Edwards logo are trade marks of Edwards Limited.

### 2.2.2 Performance characteristics

*Note: The performance characteristics described below are for use with hydrocarbon oil.*

The positions of the mode selector and the gas-ballast control define the performance characteristics of the pump. These performance characteristics are listed fully in Table 3 and Table 4.

Table 5 gives the ultimate vacuum and maximum water vapour inlet pressure for each of the six possible combinations of control positions. The curves 0, I, and II in Figure 2 show the relationship between inlet pressure and pumping speed for High Vacuum mode ♦

**Figure 2 - Performance characteristics in High Vacuum mode (pumping speed against inlet pressure)**

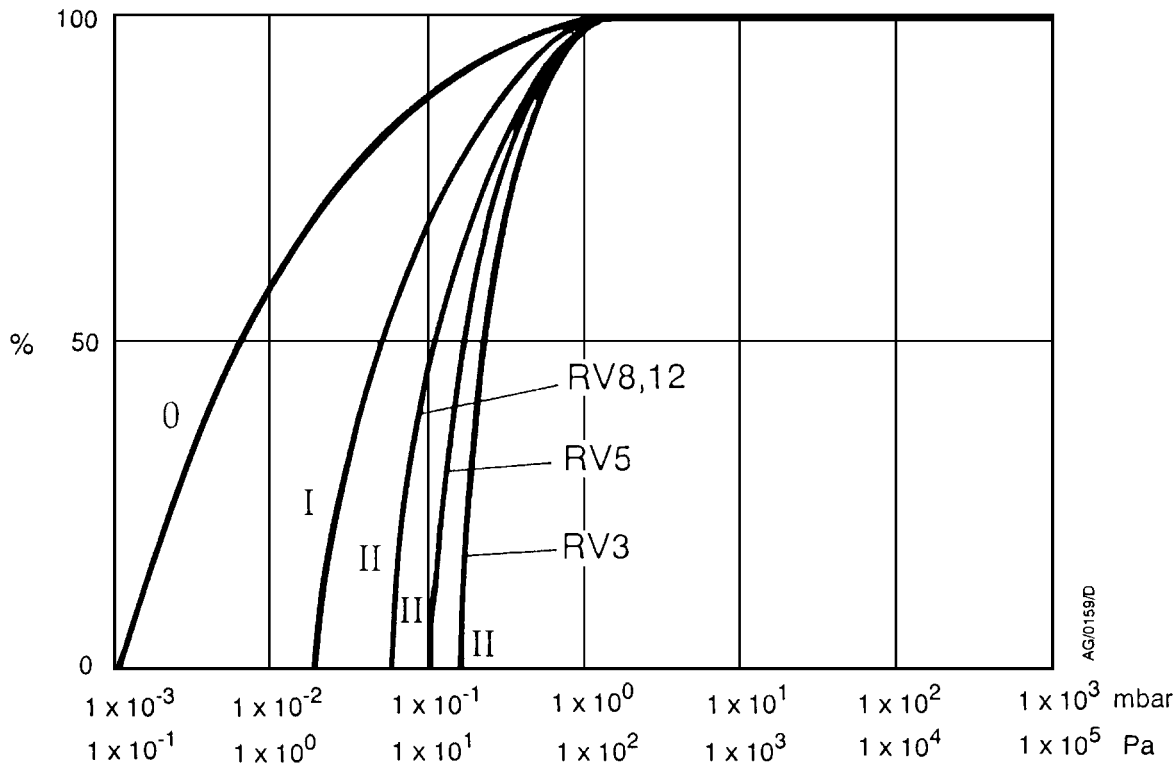


© Edwards Limited 2013. All rights reserved.
Edwards and the Edwards logo are trade marks of Edwards Limited.

## 2.3 Mechanical data

**Table 6 - Mechanical data**

| Parameter | Reference data | | | |
|---|---|---|---|---|
| Dimensions | See Figure 3 | | | |
| Degree of protection (IEC 34-5: 1981) | | | | |
| Single-phase pumps | IP44 | | | |
| Three-phase pumps | IP54 | | | |
| Maximum tilt angle | 10° | | | |
| Motor rotational speed | | | | |
| 50 Hz electrical supply | 1470 r $min^{-1}$ | | | |
| 60 Hz electrical supply | 1760 r $min^{-1}$ | | | |
| Maximum mass | **RV3** | **RV5** | **RV8** | **RV12** |
| Pumps with motor, without oil | 25.0 kg | 25.0 kg | 28.0 kg | 29.0 kg |
| Bareshaft pumps | 14.0 kg | 14.0 kg | 16.5 kg | 17.5 kg |

## 2.4 Noise and vibration data

**Table 7 - Noise and vibration data**

| Parameter | Reference data |
|---|---|
| Sound pressure* | |
| Single-phase pumps | 48 dB (A) |
| Three-phase pumps | 50 dB (A) |
| Vibration severity† | |
| Single-phase pumps | Class 1C |
| Three-phase pumps | Class 1C |

* *Measured at ultimate vacuum 1 metre from the end of the pump to ISO 11201, High Vacuum mode ♦, 50 Hz operation.*

† *Measured at the inlet port to ISO 2372 (1974)*

## 2.5 Lubrication data

*Note: Edwards Material Safety Data sheets for the rotary pump oils are available on request.*

**Table 8 - Lubrication data**

| Parameter | Reference data | | | |
|---|---|---|---|---|
| Recommended oil* | | | | |
| Hydrocarbon-prepared pumps | Edwards Ultragrade 19 | | | |
| PFPE-prepared pumps | Krytox 1506 or Fomblin 06/6 | | | |
| Oil capacity | **RV3** | **RV5** | **RV8** | **RV12** |
| Maximum | 0.70 litres | 0.70 litres | 0.75 litres | 1.00 litres |
| Minimum | 0.42 litres | 0.42 litres | 0.45 litres | 0.65 litres |

* *To operate the pump when the ambient temperature is outside the limits specified in Section 2.1, or to optimise the pump performance when pumping condensable vapours, a different oil may be needed.*


© Edwards Limited 2013. All rights reserved.
Edwards and the Edwards logo are trade marks of Edwards Limited.

**Figure 3 - Dimensions (mm)**

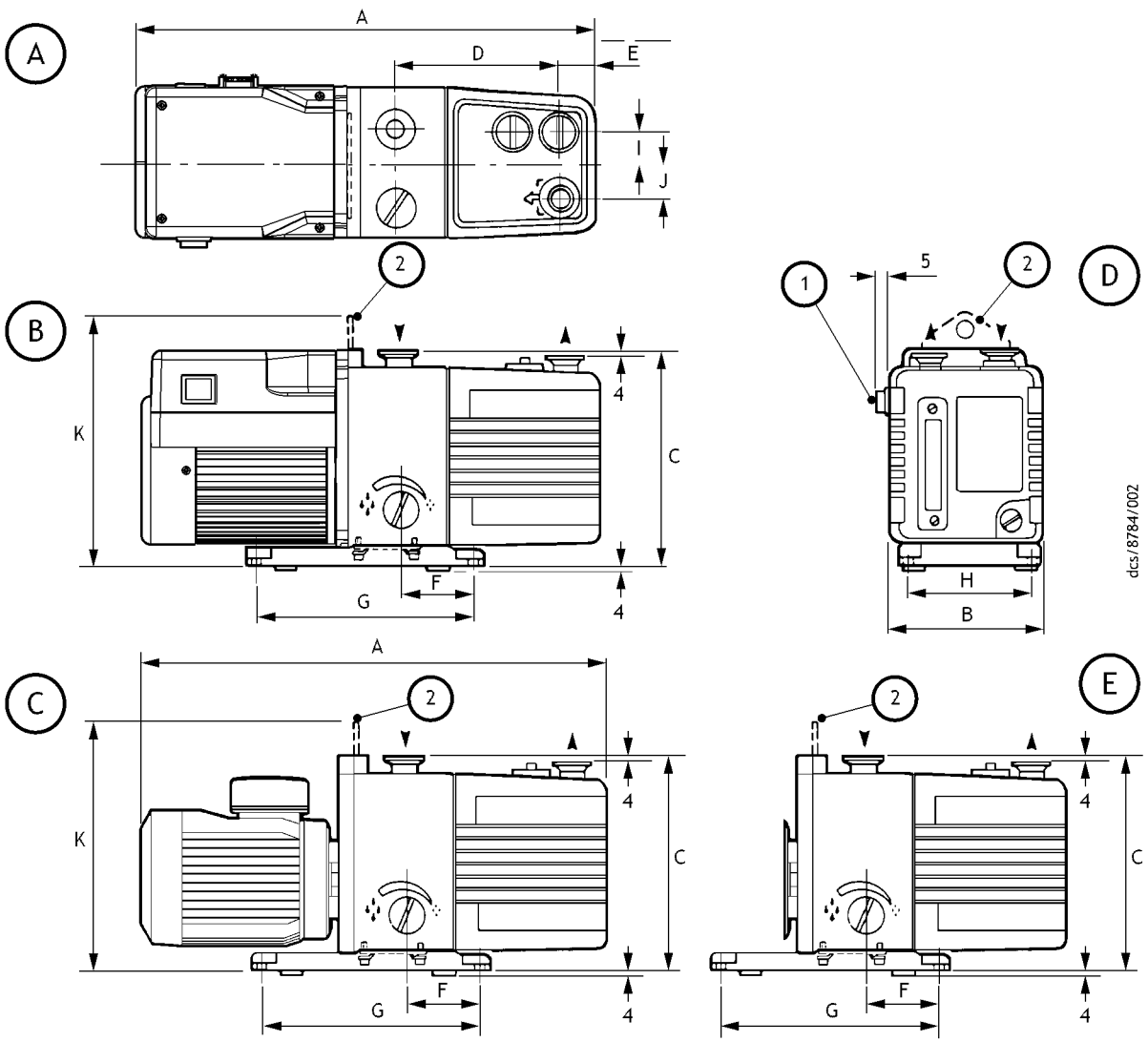


1. On-off switch (single-phase pumps only)
2. Lifting bracket (RV8 and RV12 pumps only; a lifting handle is fitted to RV3 and RV5 pumps.)

A. Top view of single-phase pump
B. Side view of single-phase pump
C. Side view of three-phase pump
D. Front view of single-phase pump
E. Side view of bareshaft pump

| Pump | A* | A† | B | C | D | E | F | G | H | I | J | K |
|---|---|---|---|---|---|---|---|---|---|---|---|---|
| RV3 | 430 | 429 | 158 | 225 | 127 | 29 | 78 | 230 | 120 | 37 | 32 | – |
| RV5 | 430 | 429 | 158 | 225 | 127 | 29 | 78 | 230 | 120 | 37 | 32 | – |
| RV8 | 470 | 429 | 158 | 225 | 161 | 35 | 78 | 230 | 120 | 37 | 32 | 261 |
| RV12 | 439 | 429 | 158 | 225 | 181 | 35 | 78 | 230 | 120 | 37 | 32 | 261 |

* *Single-phase pumps.*

† *Three-phase pumps.*

© Edwards Limited 2013. All rights reserved.
Edwards and the Edwards logo are trade marks of Edwards Limited.

## 2.6 Electrical data: single-phase pumps

*Note: Edwards recommends using fuses of the maximum ratings specified in Table 9 and Table 10. Fuses of a higher rating must not be used.*

The dual-voltage, dual-frequency motor is designed for a single-phase electrical supply and is suitable for 50 Hz or 60 Hz operation. The motor can be manually switched between nominal supply voltages of 110–120 V and 220-240 V (refer to Section 3.7.1).

When a cold pump is started, the motor will draw the start-up current shown in Table 9 and Table 10 for up to several seconds, so a slow-blow fuse must be used to prevent unnecessary fuse failure during pump start-up. Within five minutes, as the oil in the pump warms up, the current drawn will slowly reduce to the full load current specified in Table 9 and Table 10.

**Table 9 - Electrical data (single-phase pumps with Item Numbers -903 or -906)**

| Pump | Nominal supply (V) | Frequency (Hz) | Power (W) | Full load current (A) | Maximum fuse rating (A) |
|---|---|---|---|---|---|
| RV3, RV5, RV8 and RV12 | 220–240 | 50 | 450 | 3.4 | 5 |
| | 230–240 | 60 | 550 | 3.0 | 5 |
| | 110 | 50 | 450 | 6.8 | 13 |
| | 115–120 | 60 | 550 | 6.9 | 13 |

**Table 10 - Electrical data (single-phase pumps with Item Numbers -904)**

| Pump | Nominal supply (V) | Frequency (Hz) | Power (W) | Full load current (A) | Maximum fuse rating (A) |
|---|---|---|---|---|---|
| RV3, RV5, RV8 and RV12 | 200 | 50 | 450 | 4.2 | 5 |
| | 200–210 | 60 | 550 | 4.1 | 5 |
| | 100 | 50 | 450 | 8.3 | 13 |
| | 100–105 | 60 | 550 | 8.0 | 13 |

*Note: The fuse type chosen should be either a time delay type CC or a type M, or (in the UK) they should be to BS 88.*


© Edwards Limited 2013. All rights reserved.
Edwards and the Edwards logo are trade marks of Edwards Limited.

## 2.7 Electrical data: three-phase pumps

The dual-voltage, dual-frequency motor is designed for a three-phase electrical supply and is suitable for 50 Hz or 60 Hz operation. The motor can be manually switched between nominal supply voltages of 220–240 V and 380–460 V (refer to Section 3.8.1). Pumps are supplied preset for nominal 380–460 V electrical supplies.

When a cold pump is started, the motor will draw the start-up current shown in Table 11 for up to 0.5 seconds. The current will then reduce quickly as the motor reaches rated rotational speed. Within 5 minutes, as the oil and pump warms up, the current drawn will slowly reduce to a maximum of the full load current specified in Table 11.

When a warm pump is started, the motor will draw the start-up current shown in Table 11 for up to 0.5 seconds. The current drawn will then immediately fall to a maximum of the full load current.

Electrical short-circuit and ground-fault protection of the pump will be provided by fitting Class CC fuses of the values shown in Table 11 at the point of connection to the supply. If these are not available in the country of use, Type aM European fuses of the same rating can also be used.

**Table 11 - Electrical data (three-phase pumps with Item Numbers -905)**

| Pump | Nominal supply (V) | Frequency (Hz) | Power (W) | Full load current (A) | Start-up current (A) | Maximum fuse rating (A) |
|---|---|---|---|---|---|---|
| RV3 and RV5 | 200–220 | 50 | 250 | 1.7 | 10.2 | 2.5 |
| | 200–230 | 60 | 300 | 1.7 | 10.2 | 2.5 |
| | 380–415 | 50 | 250 | 1.0 | 5.7 | 2.5 |
| | 460 | 60 | 300 | 1.0 | 7.0 | 2.5 |
| RV8 and RV12 | 200–208 | 50 | 450 | 2.5 | 14.0 | 4.0 |
| | 200–230 | 60 | 550 | 2.9 | 12.0 | 4.0 |
| | 380–415 | 50 | 450 | 1.5 | 9.0 | 2.5 |
| | 460 | 60 | 550 | 1.5 | 8.7 | 2.5 |

© Edwards Limited 2013. All rights reserved.
Edwards and the Edwards logo are trade marks of Edwards Limited.

This page has been intentionally left blank.


© Edwards Limited 2013. All rights reserved.
Edwards and the Edwards logo are trade marks of Edwards Limited.

# 3 Installation

## 3.1 Safety

*WARNING*

**Edwards recommends that a hydrocarbon-prepared RV pump is not used for pumping hazardous substances. PFPE-prepared pumps are suitable for oxygen applications: refer to Section 8.**

**Obey the safety instructions in this Section and take note of appropriate precautions. If not, injury to people and damage to equipment can result.**

**Prevent any part of the human body from coming into contact with the vacuum.**

Ensure that the RV pump is suitable for the application. If there is any doubt as to the suitability of the RV pump for the application, refer to the Edwards guidelines on vacuum pump and vacuum system safety (see the Associated publications at the end of the Contents list at the front of this manual).

A suitably trained and supervised technician must install the RV pump. Obey the safety instructions listed below when installing the pump, especially when connecting the pump into an existing system. Details of specific safety precautions are given at the appropriate point in the instructions.

- Wear the appropriate safety-clothing when coming into contact with contaminated components.
- Vent and purge the vacuum system before starting installation work.
- Ensure that the installation technician is familiar with the safety procedures which relate to the pump-oil and the products handled by the pumping system. Take suitable precautions to avoid the inhalation of oil mist and excessive skin contact with pump-oil, as prolonged exposure can be harmful.
- Disconnect the other components in the pumping system from the electrical supply so that they cannot be operated accidentally.
- Safely route any electrical supply cables to prevent a trip hazard.

## 3.2 System design considerations

Consider the following points when designing the pumping system:

- Use a suitable valve to isolate the pump from the vacuum system to allow the pump to warm up before pumping condensable vapours, or to provide additional system protection when the pump is switched off.
- Avoid high levels of heat input to the pump from the process gases, otherwise the pump may overheat and seize, and cause the motor thermal overload device to open.
- If using the pump in a high ambient temperature with a high gas throughput, the temperature of the pump-body may exceed 70°C, so in order to prevent contact with hot surfaces suitable guards must be fitted.
- Make sure that the exhaust pipeline cannot become restricted. Maximum exhaust pressure is shown in Table 2. If an exhaust-isolation valve is fitted, ensure the pump cannot be operated the pump with the valve closed.
- Provide for a purge of inert gas when shutting down the pumping system, to dilute dangerous gases to safe concentrations. A suitable gas ballast adaptor for introduction of purge gas into the pump is available as an accessory (see Section 7.4.8).

© Edwards Limited 2013. All rights reserved.
Edwards and the Edwards logo are trade marks of Edwards Limited.

## 3.3 Unpack and inspect

1. Remove all packing materials, and remove the pump from its packing-box.
2. Remove the protective covers from the inlet and outlet-ports and inspect the pump. If the pump is damaged, notify the supplier and the carrier in writing within three days; state the Item Number of the pump together with the order number and the supplier's invoice number. Retain all the packing materials for inspection. Do not use the pump if it is damaged.

If the pump is not to be used immediately, replace the protective covers. Store the pump in suitable conditions, as described in Section 6.1.

## 3.4 Locate the pump

*WARNING*

**Use suitable lifting equipment to move the RV8 or RV12 pump.**
**The mass of the RV8 and RV12 pumps is approximately 29 kg.**

The RV3 and RV5 pumps have a lifting handle enabling the pump to be moved by hand. If using mechanical lifting equipment, do not attach the equipment to the handle; for stability, use slings around the motor and the pump-body.

Do not lift the RV8 and RV12 pumps by hand; attach the mechanical lifting equipment to the lifting bracket on the pump. Slings do not need to be used to move the RV8 and RV12 pumps.

Provide a firm, level platform for the pump. Locate the pump so that the oil-level sight-glass is visible and the oil filler-plug, oil drain-plug, mode selector and gas-ballast control are accessible.

If the pump will be located inside an enclosure, to ensure the ambient temperature around the pump does not exceed 40°C, adequate ventilation is required at both ends of the pump. There must be a minimum space of 25 mm between the pump and the enclosure walls.

## 3.5 Fill the pump with oil

*WARNING*

**A hydrocarbon-prepared pump must not be used to process oxygen in concentrations greater than 25% in volume. As there is a risk of fire or explosion in the oil-box of the pump. PFPE-prepared pumps are available: refer to Section 8.**

Fill the pump with oil as described below. Refer to Section 2.5 for the recommended oil. Refer to Figure 1 for the item numbers in brackets.

1. Remove one of the oil filler-plugs (6).
2. Pour oil into the pump until the oil-level just reaches the MAX mark on the bezel at the top of the sight-glass (8). If the oil-level goes above the MAX mark, remove the drain-plug (9) and drain the excess oil from the pump.
3. After a few minutes, recheck the oil-level. If the oil-level is now below the MAX mark, pour more oil into the pump.
4. Refit the oil filler-plug. Tighten the plug firmly by hand. Do not overtighten.


© Edwards Limited 2013. All rights reserved.
Edwards and the Edwards logo are trade marks of Edwards Limited.

## 3.6 Fit the motor (bareshaft pumps only)

For a bareshaft pump, fit the motor to the pump now: refer to Section 9.

## 3.7 Electrical installation: single-phase pumps

### 3.7.1 Check and configure the motor

*CAUTION*

**Ensure that the motor is correctly configured for the local electrical supply. If the pump is operated when the motor is not correctly configured for the electrical supply, the motor will be damaged.**

Refer to Figure 4 for the item numbers in brackets.

Ensure that the voltage shown on the voltage selector switch (3) in the motor-cover corresponds with the local electrical supply voltage. If it does not, change the configuration of the pump-motor to match the local electrical supply voltage; use the following procedure.

1. Undo the two retaining screws (6) securing the voltage selector switch cover (5).
2. Remove the voltage selector switch cover (5) and toggle the voltage selector switch (3) into the alternate position.
3. Invert the voltage selector switch cover (5) and refit over the voltage selector switch (3).
4. Refit the two retaining screws (6).

### 3.7.2 Connect the pump to the electrical supply

*WARNING*

**Ensure that the electrical installation of the RV pump conforms with local and national safety requirements. It must be connected to a suitably fused and protected electrical supply and a suitable earth (ground) point.**

*Notes:* *In the UK, if using a 13 A plug, it must comply with BS1363A and be fitted with a 13 A fuse which complies with BS1362.*

*To prevent automatic restart of the pump-motor if the electrical supply is restored after an electrical supply failure, connect the pump to the electrical supply through suitable control equipment which must be reset manually after an electrical supply failure.*

*Make the electrical connections to the pump-motor with an IEC 320 cable socket (cold condition type) that satisfies local electrical standards.*

*To maintain compliance with CSA standards, only CSA/UL certified electrical supply cables and connectors must be used. Cables must be SJT rated (minimum) and must incorporate an earth conductor. The conductors in the cable must be a minimum of 18 AWG. The temperature rating of the cable must be 70°C or greater.*

© Edwards Limited 2013. All rights reserved.
Edwards and the Edwards logo are trade marks of Edwards Limited.

If the RV pump was supplied with an electrical supply cable, the cable will be fitted with a moulded IEC connector at one end. The other end of the cable may be fitted with a plug suitable for the local electrical supply. A cable without a plug will contain wires colour coded as follows:

| Colour | Use |
|---|---|
| Green and yellow | Earth (ground) |
| Blue | Neutral |
| Brown | Live |

1. Ensure that the on/off switch on the motor (Figure 4, item 4) is in the 'off' position.
2. Insert the moulded IEC connector at the end of the cable into the electrical inlet-connector on the motor (Figure 4, item 2).
3. Connect the plug (if fitted) at the other end of the cable to the electrical supply. If a plug is not fitted, connect the wires in the cable to the correct terminals of the electrical supply.

### 3.7.3 Check the direction of rotation

*CAUTION*

**Ensure that the pump-motor rotates in the correct direction. If it does not, the pump and the vacuum system can become pressurised.**

Refer to Figure 1 for the item numbers in brackets.

1. Watch the motor cooling-fan through the motor fan-cover (13).
2. Use the on/off switch (12) to switch-on the electrical supply to the motor for a few seconds.
3. Check that the motor cooling-fan rotates in the correct direction (14) shown by the arrow on the motor fan-cover. If the direction of rotation is incorrect, switch off the electrical supply immediately and contact the supplier or Edwards for advice.


© Edwards Limited 2013. All rights reserved.
Edwards and the Edwards logo are trade marks of Edwards Limited.

**Figure 4 - Motor voltage configuration: single-phase pumps**

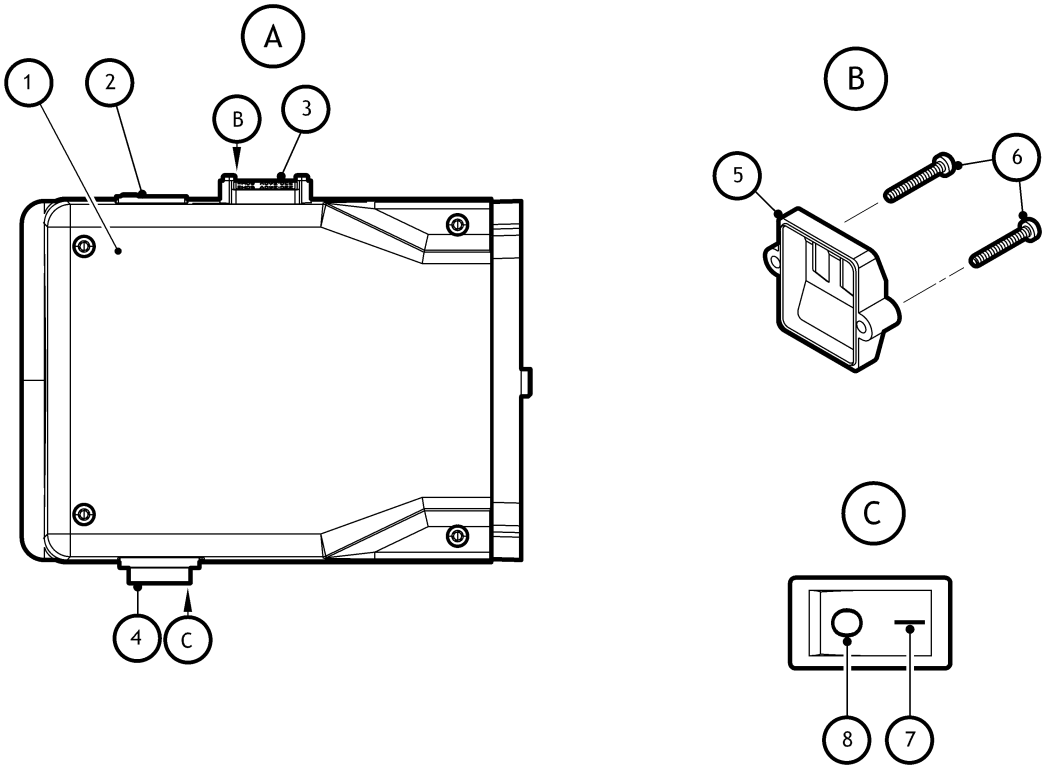


A. Top view of motor
B. View of voltage selector switch cover
C. View of On-off switch

1. Terminal box
2. Electrical inlet-connector
3. Voltage selector switch
4. On-off switch
5. Voltage selector switch cover
6. Retaining screws
7. Position 'I' (on)
8. Position '0' (off)

© Edwards Limited 2013. All rights reserved.
Edwards and the Edwards logo are trade marks of Edwards Limited.

## 3.8 Electrical installation: three-phase pumps

### 3.8.1 Check and configure the motor

*CAUTION*

**Ensure that the motor is correctly configured for the local electrical supply. If the pump is operated when the motor is not correctly configured for the electrical supply, the motor will be damaged.**

1. Remove the screws which secure the cover of the motor terminal-box. Remove the cover.
2. Remove the cable-gland from the inside of the terminal-box and fit the cable-gland to the cable leadthrough hole in the side of the terminal-box.
3. Ensure that the motor is correctly configured for the local electrical supply. If necessary, reconfigure the links (Figure 5 and Figure 6, item 1) to suit the local electrical supply:
   - For 200–230 V electrical supplies, the links must be configured as shown in Figure 5.
   - For 380–460 V electrical supplies, the links must be configured as shown in Figure 6.

### 3.8.2 Connect the pump to the local electrical supply

*WARNING*

**Ensure that the electrical installation of the RV pump conforms with local and national safety requirements. It must be connected to a suitably fused and protected electrical supply and a suitable earth (ground) point.**

*Notes:* *To prevent automatic restart of the pump-motor if the electrical supply is restored after an electrical supply failure, connect the pump to the electrical supply through suitable control equipment which must be reset manually after an electrical supply failure.*

*To maintain compliance with CSA (Canadian Standards Association) standards, a switch or circuit breaker must be incorporated into the pump electrical supply. The switch or circuit breaker must be close to the pump and easily accessible, and must be clearly marked to identify that it is the electrical supply disconnection device for the pump.*

Edwards recommends that the electrical supply is connected to the motor through a starter or circuit breaker which has thermal over-current protection which can be adjusted to suit the full load current ratings shown in Table 11. The fuse ratings in Table 11 are provided for guidance only. The supplier of the thermal over-current protection device may specify different values to ensure correct operation of the fuse and the over-current protection device. Ensure that the fuse used is suitable for the starting currents given in Table 11.

1. Remove the cover from the motor terminal box.
2. Remove the cable-gland from the inside of the terminal box and fit the cable-gland to the cable leadthrough hole in the side of the terminal box. Using a tool this should be tightened to a torque of 3.75 Nm.
3. Pass the electrical supply cable through the cable-gland. The diameter of the electrical supply cable should be in the range 7 to 11 mm.
4. Use insulated crimped connectors to connect the wires in the cable to the terminals U1, V1 and W1 and Earth (ground) in the terminal-box as shown in Figure 5 and Figure 6. The earth (ground) terminal connection must be tightened to a torque of 2.13 to 2.87 Nm.
5. Tighten the dome-shaped nut on the cable-gland until the outer sheath of the cable is firmly gripped. Using a tool this should be tightened to a torque of 2.5 Nm, do not overtighten.
6. Ensure that the cover gasket is correctly positioned, then refit the cover to the terminal-box and secure with the screws.


© Edwards Limited 2013. All rights reserved.
Edwards and the Edwards logo are trade marks of Edwards Limited.

**Figure 5 - Three-phase electrical connections: 200-230 V**

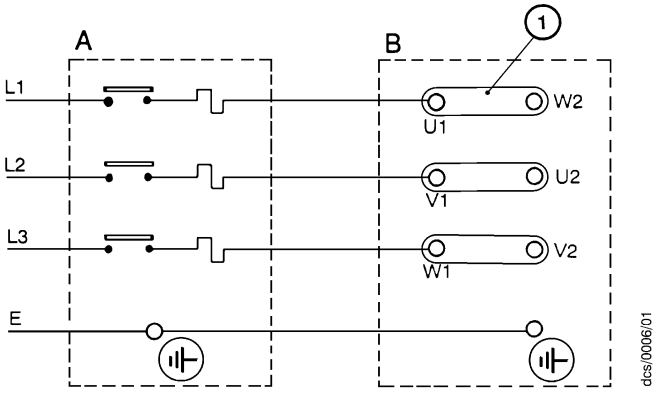


A. Starter/contactor
B. Motor terminal-box

1. Links

**Figure 6 - Three-phase electrical connections: 380-460 V**

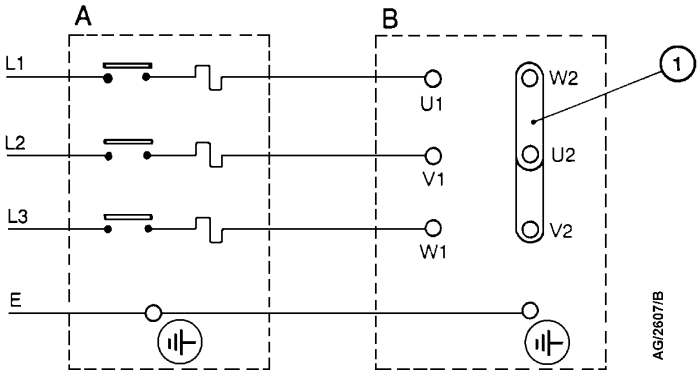


A. Starter/contactor
B. Motor terminal-box

1. Links

© Edwards Limited 2013. All rights reserved.
Edwards and the Edwards logo are trade marks of Edwards Limited.

### 3.8.3 Check the direction of rotation

*CAUTION*

**Ensure that the pump-motor rotates in the correct direction. If it does not, the pump and vacuum system can become pressurised.**

1. Refer to Figure 1. Watch the motor cooling-fan through the motor fan-cover (13).
2. Switch-on the electrical supply to the motor for a few seconds.
3. Check that the motor cooling-fan rotates in the correct direction shown by the arrow on the motor mounting plate. If the direction of rotation is incorrect:
   - Switch off the electrical supply immediately.
   - Isolate the pump from the electrical supply.
   - Remove the terminal-box cover and swap wires L1 and L3: see Figure 5 and Figure 6.
   - Refit the cover to the terminal-box.

## 3.9 Inlet and outlet connections

*WARNING*

**Connect the exhaust to a suitable treatment plant to prevent the discharge of dangerous gases and vapours to the surrounding atmosphere. Use a catchpot to prevent the drainage of contaminated condensate back into the pump.**

Before connecting the pump to the vacuum system, fit the centring-ring and inlet-filter (supplied with the pump) to the pump inlet-port (see Figure 3 (item 4)).

Take note of the following information when connecting the pump to the vacuum system. Refer to Section 7 for details of the accessories mentioned below. Use standard NW25 fittings (not supplied) when connecting the pump.

- For optimum pumping speeds, ensure that the pipeline connected to the pump-inlet is as short as possible and has an internal diameter of 25 mm or larger.
- Support the vacuum pipelines to prevent loading of the coupling-joints.
- If necessary, incorporate flexible bellows in the system pipelines to reduce the transmission of vibration and to prevent loading of coupling-joints. If using flexible bellows, ensure that bellows which have a maximum pressure rating which is greater than the highest pressure that can be generated in the system are used. Edwards recommends using Edwards flexible bellows.
- Use a suitable inlet trap if pumping condensable vapours or if the pump is to be used for very dusty applications.
- Use a suitable valve to isolate the pump from the vacuum system if pumping condensable vapours or to maintain vacuum when the pump is switched off.
- Ensure that sealing surfaces are clean and scratch-free.


© Edwards Limited 2013. All rights reserved.
Edwards and the Edwards logo are trade marks of Edwards Limited.

In any of the following circumstances, fitting an oil mist filter to the pump outlet is recommended:

- If using the pump with the gas ballast control open (in position ‘I’ or position ‘II’).
- If operating the pump with an inlet pressure greater than 10 mbar (1 x $10^3$ Pa) for extended periods.
- If the pump is frequently pumped down from atmospheric pressure.

The oil mist filter will trap the oil exhausted from the pump; the oil can be reused if it is not contaminated.

## 3.10 Leak-test the system

Leak-test the system and seal any leaks found after installing the RV pump, to prevent leakage of substances out of the system and leakage of air into the system.

© Edwards Limited 2013. All rights reserved.
Edwards and the Edwards logo are trade marks of Edwards Limited.

This page has been intentionally left blank.


© Edwards Limited 2013. All rights reserved.
Edwards and the Edwards logo are trade marks of Edwards Limited.

# 4 Operation

*WARNING*

**Do not expose any part of the human body to vacuum as it can cause injury.**

## 4.1 ATEX directive implications

### 4.1.1 Introduction

This equipment is designed to meet the requirements of Group II Category 3 equipment in accordance with Directive 94/9/EC of the European Parliament and the Council of 23rd March 1994 on the approximation of the laws of the Member States concerning equipment and protective systems intended for use in potentially explosive atmospheres. (The ATEX Directive)

The ATEX Category 3 applies in respect of potential ignition sources internal to the equipment. An ATEX Category has not been assigned in respect of potential ignition sources on the outside of the equipment as the equipment has not been designed for use where there is an external potentially explosive atmosphere.

There is no potential source of ignition within the pump during normal operation but there may be potential sources of ignition under conditions of predicted and rare malfunction as defined in the Directive. Accordingly, although the pump is designed to pump flammable materials and mixtures, operating procedures should ensure that under all normal and reasonably predicted conditions, these materials and mixtures are not within explosive limits. Category 3 is considered appropriate for the avoidance of ignition in the case of a rare malfunction which allows flammable materials or mixtures to pass through the pump while within their explosive limits.

### 4.1.2 Flammable/pyrophoric materials

*WARNING*

**The instructions must be obeyed and note taken of the precautions given below, to ensure that pumped gases do not enter their flammable ranges.**

When flammable or pyrophoric materials are present within the equipment:

- Do not allow air to enter the equipment.
- Ensure the system is leak tight.
- Use an inert gas purge (for example, a nitrogen purge) to dilute any flammable gases or vapours entering the pump inlet, and/or use an inert gas purge to reduce the concentration of flammable gases or vapours in the pump and in the exhaust pipeline to less than one quarter of the gases' published lower explosive limits (LEL).
- Use an inert gas purge into the pump gas ballast connection to prevent the condensation of flammable vapours within the pump mechanism and exhaust pipeline.

© Edwards Limited 2013. All rights reserved.
Edwards and the Edwards logo are trade marks of Edwards Limited.

### 4.1.3 Gas purges

*WARNING*

**If using inert gas purges to dilute dangerous gases to a safe level, ensure that the RV3, RV5, RV8 and RV12 rotary vane pump is shut down if an inert gas supply fails.**

*WARNING*

**The instructions must be obeyed and note taken of the precautions given below, to ensure that pumped gases do not enter their flammable ranges.**

Switch on the inert gas purge to remove air from the pump and the exhaust pipeline before the process starts. Switch off the purge flow at the end of the process only after any remaining flammable gases or vapours have been purged from the pump and exhaust pipeline.

If liquids that produce flammable vapours could be present in the pump foreline, then the inert gas purge to the RV3, RV5, RV8 and RV12 rotary vane pump should be left on all the time this liquid is present. Flammable liquids could be present in the foreline as a result of condensation, or may be carried over from the process.

When calculating the flow rate of inert gas required for dilution, consider the maximum flow rate for the flammable gases/vapours that could occur. For example, if a mass flow controller is used to supply flammable gases to the process, assume a flow rate for flammable gases that could arise if the mass flow controller is fully open.

Continually measure the inert gas purge flow rate: if the flow rate falls below that required, stop the flow of flammable gases or vapours into the pump.

*Note: Please read the Vacuum Pump and Vacuum System Safety manual (publication number P400-40-100), supplied with the pump.*

## 4.2 How to use the pump controls

### 4.2.1 Introduction

Use the mode selector (Figure 1, item 11) and the gas-ballast control (Figure 1, item 5) to optimise the performance of the RV pump for the application. The performance characteristics of the pump with the different control settings are shown in Table 3 and Table 4. The position of both the mode selector and the gas-ballast control can be changed when the pump is off or when the pump is operating.


© Edwards Limited 2013. All rights reserved.
Edwards and the Edwards logo are trade marks of Edwards Limited.

### 4.2.2 Mode selector

*Note: The pump is supplied with High Vacuum mode selected. If High Vacuum mode is selected and the mode selector cannot be turned by hand to select the High Throughput mode, use a suitable tool fitted to the flat part of the mode selector to turn the selector.*

The mode selector controls the flow of pressurised oil to the high vacuum stage of the pump (see Section 1.4.1). The mode selector can be turned to one of two positions, as follows:

To select the High Vacuum mode , turn the mode selector fully clockwise and tighten by hand. When High Vacuum mode is selected, there is a gap of approximately 3 mm between the mode selector and the inner face of the side panel of the pump. Use this mode:

- to achieve ultimate vacuum
- to pump clean gases
- to pump clean condensable vapours.

To select the High Throughput mode , turn the mode selector fully anticlockwise until it touches the inner face of the side panel of the pump, then gently tighten by hand. Use this mode:

- for long-term operation with high gas throughput (that is, inlet pressure > 50 mbar)
- to pump dirty condensable vapours
- to decontaminate the oil.

### 4.2.3 Gas-ballast control

Use the gas-ballast control to change the amount of air (or inert gas) introduced into the low vacuum stage of the pump (refer to Section 1.4.2). Use of gas-ballast will prevent the condensation of vapours in the pump; the condensates would contaminate the oil. The gas-ballast control can be turned to select one of three positions, as follows:

To select gas-ballast closed, turn the control to position ‘0’. Use this setting:

- to achieve ultimate vacuum
- to pump dry gases.

To select low flow gas-ballast, turn the control to position ‘I’. Use this setting:

- to pump low concentrations of condensable vapours
- to decontaminate the oil.

To select high flow gas-ballast, turn the control to position ‘II’. Use this setting:

- to pump high concentrations of condensable vapours.

When using either low flow or high flow gas-ballast, there will be an increased rate of oil loss from the pump. Where possible, Edwards recommends that low flow gas-ballast (position ‘I’) is selected, rather than high flow gas-ballast (position ‘II’), to minimise the loss of oil.

© Edwards Limited 2013. All rights reserved.
Edwards and the Edwards logo are trade marks of Edwards Limited.

## 4.3 Start-up procedure

*WARNING*

**Ensure that the system design does not allow the exhaust pipeline to be blocked.**

If the oil is contaminated, or if the pump temperature is below 12°C, or if the electrical supply voltage is more than 10% below the lowest voltage specified on the voltage indicator (Figure 4, item 3), the pump may operate at a reduced speed for a few minutes. On single-phase pumps, if the pump continues to operate at reduced speed, the motor thermal overload device will open and stop the pump. When the motor has cooled, the thermal overload device will reset automatically and the pump will restart.

1. Check that the pump oil-level is between the MAX and MIN marks on the bezel of the oil-level sight-glass; if it is not, refer to Section 5.3.
2. Turn the mode selector fully clockwise to select High Vacuum mode ♦ or fully anticlockwise to select High Throughput mode ♦, as required (refer to Section 4.2.2).
3. Turn the gas-ballast control to position ‘0’, ‘I’ or ‘II’, as required (refer to Section 4.2.3).
4. Switch on the electrical supply to the pump; on single-phase pumps, use the on/off switch.
5. In order to achieve ultimate vacuum, to pump condensable vapours or to decontaminate the pump oil, refer to the procedures in Section 4.4, 4.5 and 4.6 respectively. Otherwise, open the vacuum system isolation-valve.

## 4.4 To achieve ultimate vacuum

If the pump does not achieve the performance specified in Section 2.2, make sure that this is not due to the system design before contacting the supplier or Edwards for advice. In particular, the vapour pressure of all materials used in the vacuum system (including pump oil, see below) must be much lower than the specified ultimate vacuum of the pump. Refer to Section 5.12.3 for a list of possible causes for failure to achieve the specified performance; note however that the most common causes are:

- The pressure measurement technique or gauge head is unsuitable or the gauge head is faulty.
- If an oil other than the recommended oil has been used, and the vapour pressure of the oil is higher than the specified ultimate vacuum of the pump.

Use the following procedure to achieve ultimate vacuum:

1. Isolate the RV pump from the vacuum system.
2. Turn the mode selector to select High Throughput mode ♦, set the gas-ballast control to low flow (position ‘I’) and operate the pump for at least 1 hour (or overnight) to thoroughly purge the oil of contaminants.
3. Turn the mode selector to select High Vacuum mode ♦ and close the gas-ballast control (position ‘0’).

Open the vacuum system isolation-valve and pump down to ultimate vacuum.


© Edwards Limited 2013. All rights reserved.
Edwards and the Edwards logo are trade marks of Edwards Limited.

## 4.5 To pump condensable vapours

Use gas-ballast (gas-ballast control in position ‘I’ or ‘II’) when there is a high proportion of condensable vapours in the process gases.

1. Close the vacuum system isolation-valve.
2. Turn the mode selector fully clockwise to select High Vacuum mode ♠ or fully anticlockwise to select High Throughput mode ♠, as required (refer to Section 4.2.2).
3. Turn the gas-ballast control to high flow (position ‘II’) and operate the pump for 30 minutes to warm the oil; this will help to prevent vapour condensation in the pump.
4. Set the gas-ballast control to the position required for the application (refer to Section 4.2.3 and the data in Table 3 and Table 4).
5. Open the vacuum system isolation-valve.

After pumping condensable vapours, decontaminate the oil if necessary: use the procedure in Section 4.6.

## 4.6 To decontaminate the oil

The oil in the pump should be clear; if the oil is cloudy or discoloured, it is contaminated with process vapours.

1. Look at the condition of the oil in the oil-level sight-glass (Figure 1, item 8). If the oil is cloudy or discoloured, continue with the procedure at Step 2 below.
2. Close the vacuum system isolation-valve.
3. Turn the mode selector fully anticlockwise to select High Throughput mode ♠. Set the gas-ballast control to low flow (position ‘I’).
4. Operate the pump until the oil is clear.

## 4.7 Unattended operation

The RV pump is designed for unattended operation under the normal operating conditions specified in Section 2.1. However, Edwards recommends checking the pump at regular intervals of not more than 14 days, or more frequently if pumping high volumes of gas or vapour.

On single-phase pumps, the motor is protected by an overload device which isolates the pump from the electrical supply when critical temperature or current levels are exceeded. The overload device resets automatically when the motor has cooled. When checking the pump, make sure that the pump is not going through a repetitive cycle of thermal overload failures and automatic resets. If necessary, change the mode selector to High Throughput mode ♠ and reduce the thermal load from the pumped gases, to prevent overheating of the pump.

© Edwards Limited 2013. All rights reserved.
Edwards and the Edwards logo are trade marks of Edwards Limited.

## 4.8 Shut-down

Edwards recommends, as described in the following procedure, decontaminating the oil before shutting down the pump; this will prevent damage to the pump by the contaminates in the oil.

1. Refer to Section 4.6 and decontaminate the oil, as required.
2. Close the vacuum system isolation-valve (if not already closed).
3. Close gas-ballast (set the gas-ballast control to position ‘0’).
4. On single-phase pumps, use the on/off switch to switch off the pump.
5. Switch off the electrical supply to the pump.


© Edwards Limited 2013. All rights reserved.
Edwards and the Edwards logo are trade marks of Edwards Limited.

# 5 Maintenance

## 5.1 Safety information

*WARNING*

**Obey the safety instructions given below and take note of appropriate precautions. Failure to do so can cause injury to people and damage to equipment.**

- If the pump is PFPE-prepared, refer to Section 8 before maintaining the pump.
- A suitably trained and supervised technician must maintain the pump. Obey local and national safety requirements.
- Ensure that the maintenance technician is familiar with the safety procedures which relate to the pump-oil and the products processed by the pumping system.
- Check that all the required parts are available and of the correct type before starting work.
- Isolate the pump and other components from the electrical supply so that they cannot be operated accidentally.
- Allow the pump to cool (so that it is at a safe temperature for skin contact) before starting maintenance work. Make sure the pump is switched off in case the thermal overload device restarts the pump.
- Do not reuse O-rings and seals if they are damaged.
- After maintenance is completed, recheck the direction of pump rotation if the electrical supply has been disconnected.
- The pump and the pump-oil will be contaminated with the process chemicals that have been pumped during operation. Ensure that the pump is decontaminated before maintenance and that adequate precautions are taken to protect people from the effects of dangerous substances if contamination has occurred.
- Do not touch or inhale the thermal breakdown products of fluorinated materials which may be present if the pump has been heated to 310°C and above. Fluorinated materials are safe in normal use but can decompose into very dangerous substances (which may include hydrofluoric acid) if they are heated to 310°C and above. The pump may have overheated if it was misused, if it malfunctioned, or if it was in a fire. Material Safety Data Sheets for fluorinated materials used in the pump are available on request: contact the supplier or Edwards.
- If necessary, maintain the motor as specified in the manufacturers information supplied with the motor.

© Edwards Limited 2013. All rights reserved.
Edwards and the Edwards logo are trade marks of Edwards Limited.

## 5.2 Maintenance plan

The plan shown in Table 12 details the routine maintenance operations necessary to maintain RV pumps in normal use. Instructions for each operation are given in the section shown.

More frequent maintenance may be required if the pump is used to pump corrosive or abrasive gases and vapours, such as solvents, organic substances and acids; in these circumstances, Edwards recommends replacing the pump seals every year (refer to Section 7.3 for details of available spares). If necessary, adjust the maintenance plan according to prior experience.

When maintaining the RV pump, use Edwards spares and maintenance kits; these contain all of the components necessary to complete maintenance operations successfully. The Item Numbers of the spares and kits are given in Section 7.3.

**Table 12 - Maintenance plan**

| Operation | Frequency | Refer to Section |
|---|---|---|
| Check the oil-level | Monthly | 5.3 |
| Replace the oil | Every 3000 hours of operation | 5.4 |
| Inspect and clean the inlet-filter | Yearly | 5.5 |
| Inspect and clean the gas-ballast control | Yearly | 5.6 |
| Clean the oil-level sight-glass | Yearly | 5.7 |
| Clean the motor fan-cover and enclosure | Yearly | 5.8 |
| Clean and overhaul the pump | Every 15000 hours of operation | 5.9 |
| Fit new blades | Every 30000 hours of operation | 5.10 |
| Test the motor condition | Every 15000 hours of operation | 5.11 |

## 5.3 Check the oil-level

*Note: If required, the oil-level can be checked while the pump is operating. The pump must be switched off and the pump and other components in the pumping system isolated from the electrical supply before pouring oil into the pump.*

Refer to Figure 1 for the items in brackets.

1. Check that the oil-level in the sight-glass (8) is between the MAX and MIN level marks on the bezel of the sight-glass.
2. If the oil-level is near to or below the MIN level mark, remove one of the filler-plugs (6) and pour more oil into the reservoir until the oil reaches the MAX level mark. If the oil-level goes above the MAX mark, remove the drain-plug (9) and drain the excess oil from the pump. Refit the filler-plug.
3. If the oil is contaminated, drain and refill the pump with clean oil as described in Section 5.4.


© Edwards Limited 2013. All rights reserved.
Edwards and the Edwards logo are trade marks of Edwards Limited.

## 5.4 Replace the oil

1. Refer to Figure 1. Operate the pump for approximately ten minutes to warm the oil, then switch off the pump (this lowers the viscosity of the oil and enables it to be drained from the pump more easily).
2. Isolate the pump from the electrical supply and disconnect it from the vacuum system.
3. Remove one of the oil filler-plugs (6).
4. Place a suitable block under the pump-motor to tilt the pump and place a suitable container under the drain-plug (9). Remove the drain-plug and allow the oil to drain into the container.
5. If the oil drained from the pump is contaminated, pour clean oil into the filler-hole and allow it to drain out of the pump. Repeat this step until the oil reservoir in the pump has been thoroughly cleaned.
6. Refit the drain-plug, remove the block and reconnect the pump to the vacuum system.
7. Fill a suitable container with clean oil and pour the oil into the filler hole until the oil-level reaches the MAX level mark on the bezel of the sight-glass (8).
8. Allow a few minutes for the oil to drain into the pump. If necessary, add more oil. Refit the filler-plug.

## 5.5 Inspect and clean the inlet-filter

1. Refer to Figure 7. Disconnect the vacuum system from the pump inlet-port (3) and remove the centring-ring and filter assembly (1) and the O-ring (2). Inspect the centring-ring and the O-ring. If they are clean, continue at Step 5. If they are not clean, continue at Step 2.
2. Remove the O-ring (2) from the centring-ring and filter assembly (1). Do not allow the O-ring to come into contact with the cleaning solution.
3. Wash the centring-ring and filter assembly in a suitable cleaning solution and allow it to dry.
4. If necessary, wipe the O-ring with a clean, dry, lint-free cloth.
5. Refit the centring-ring and filter assembly and the O-ring to the inlet-port. Refit the vacuum system to the pump inlet-port.

**Figure 7 - Inlet-filter assembly**

1. Centring-ring and filter assembly
2. O-ring
3. Inlet-port

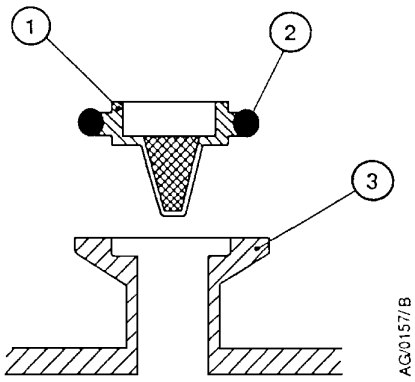


© Edwards Limited 2013. All rights reserved.
Edwards and the Edwards logo are trade marks of Edwards Limited.

## 5.6 Inspect and clean the gas-ballast control

*Note: The gas-ballast filter element (Figure 8, item 7) is retained in its seating with adhesive; do not try to remove it.*

1. Refer to Figure 8. Turn the gas-ballast control (1) to the high flow position (position 'II').
2. Push the control down against the compression spring (6) as far as it will go, then turn the control anticlockwise slightly to release the bayonet-lugs (5) and remove the control.
3. If necessary, wipe the control with a clean, dry, lint-free cloth and check that the air-hole (3) is not blocked.
4. Refit the control into the gas-ballast inlet and ensure that the compression spring locates correctly between the bayonet-lugs.
5. Push the control down as far as it will go and turn the control clockwise slightly until the bayonet-lugs engage correctly.
6. Reset the gas-ballast control to the required position.

**Figure 8 - Gas-ballast control assembly**

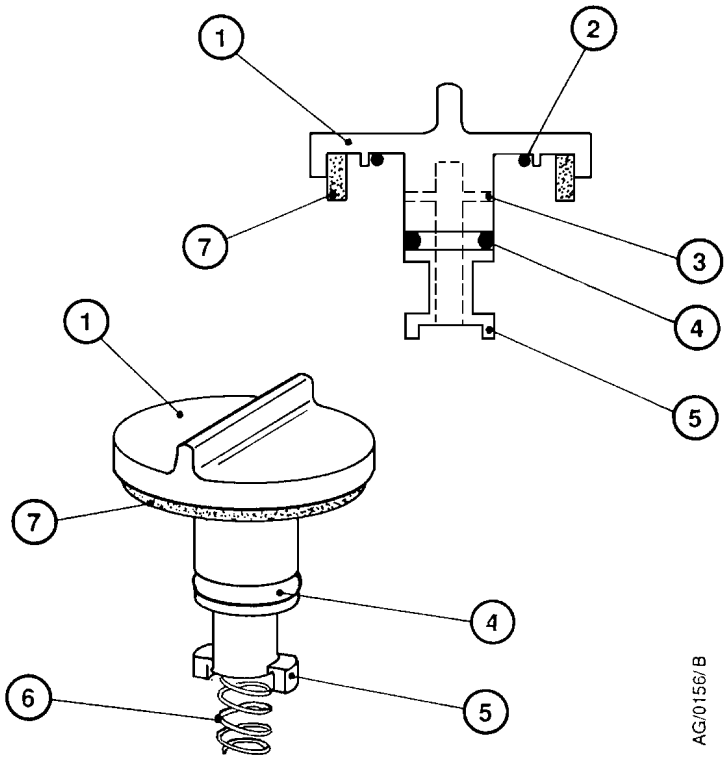


1. Gas-ballast control
2. O-ring
3. Air-hole
4. O-ring
5. Bayonet-lugs
6. Compression spring
7. Filter element


© Edwards Limited 2013. All rights reserved.
Edwards and the Edwards logo are trade marks of Edwards Limited.

## 5.7 Clean the oil-level sight-glass

Refer to Figure 9 for the item numbers in brackets.

1. Drain the oil as described in Section 5.4.
2. Undo the two screws (1) and remove the bezel (2), the sight-glass (3) and the O-ring (4) from the oil-box (5).
3. Clean the screws, bezel and sight-glass with a suitable cleaning solution.
4. Wipe the O-ring with a clean, dry, lint-free cloth.
5. Wipe the sight-glass recess in the oil-box with the cloth.
6. Refit the O-ring, sight-glass and bezel and secure with the two screws.
7. Refill the pump with oil as described in Section 5.4.
8. Check that the sight-glass does not leak.

**Figure 9 - Sight-glass assembly**

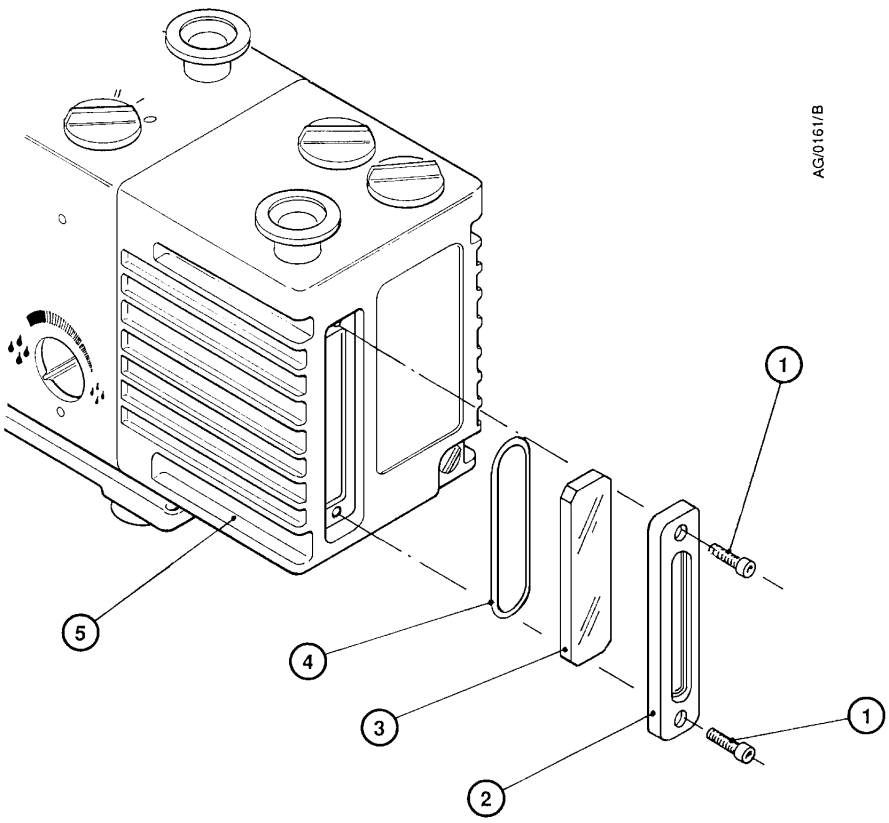


1. Screws (2 off M6 x 20)
2. Bezel
3. Sight-glass
4. O-ring
5. Oil-box

© Edwards Limited 2013. All rights reserved.
Edwards and the Edwards logo are trade marks of Edwards Limited.

## 5.8 Clean the motor fan-cover and enclosure

If the motor fan-cover and enclosure are not kept clean, the air-flow over the motor can be restricted and the pump may overheat.

1. Switch off the pump and disconnect it from the electrical supply.
2. Use a dry cloth and a soft brush to remove dirt and deposits from the fan-cover and enclosure.

## 5.9 Clean and overhaul the pump

Clean and overhaul the pump as described in the instructions supplied with the clean and overhaul kit (see Section 7.3).

## 5.10 Fit new blades

Fit new blades to the pump as described in the instructions supplied with the blade kit (see Section 7.3).

## 5.11 Test the motor condition

Test the earth (ground) continuity and the insulation resistance of the pump-motor, in accordance with local regulations for periodic testing of electrical equipment.

The motor of single-phase RV pumps complies with IEC 1010–1. Edwards recommends that, to maintain compliance with IEC 1010–1, the earth continuity is less than 0.1 Ω and the insulation resistance is greater than 10 MΩ.

If the motor fails these tests, the motor must be replaced.

## 5.12 Fault-finding

### 5.12.1 Introduction

A list of fault conditions and their possible causes is provided in the following sections to assist in fault-finding. If a fault cannot be rectified using this guide, call the nearest Edwards Service Centre for help.

### 5.12.2 The pump has failed to start

- The electrical supply fuse has failed.
- The electrical supply voltage does not match that of the motor.
- The outlet pipeline or the outlet-filter (if fitted) is blocked.
- The oil temperature is below 12°C.
- The oil is too viscous.
- The oil is contaminated.
- The pump has seized after long storage.
- The pump has been left to stand after contaminants have been pumped and has seized.
- The motor is faulty.


© Edwards Limited 2013. All rights reserved.
Edwards and the Edwards logo are trade marks of Edwards Limited.

### 5.12.3 The pump has failed to achieve the specified performance (has failed to reach ultimate vacuum)

- The pressure measurement technique or gauge head is unsuitable or gives an incorrect indication of pressure. For example, a contaminated Pirani gauge can indicate a pressure which is several times higher than the actual pressure in the system.
- The pump has been filled with the wrong type of oil.
- There is a leak in the vacuum system.
- The mode selector and gas-ballast control are set incorrectly.
- The oil-level is below minimum level.
- The oil is contaminated.
- The vacuum fittings are dirty or damaged.
- The inlet-filter is blocked.
- The pump has not warmed up.

### 5.12.4 The pump is noisy

- The motor fan-cover is damaged.
- The motor bearings are worn.
- The oil is contaminated with solid particles.

### 5.12.5 The pump surface temperature is above 100°C

*Note: If the inlet pressure is continuously higher than 100 mbar (1 x $10^4$ Pa), the surface temperature of the RV12 pump can reach 115°C when the ambient temperature is 40°C.*

- The ambient temperature is too high.
- The cooling-air supply is insufficient or is too hot.
- The electrical supply voltage is too high.
- The outlet-filter or the outlet pipeline is blocked.
- The oil-level is below minimum level.
- The pump has been filled with the wrong type of oil.
- The oil is contaminated.
- The process gas is too hot or the throughput is too high.

### 5.12.6 The vacuum is not fully maintained after the pump is switched off

- The gas-ballast control is open (in position ‘I’ or ‘II’).
- The inlet valve-pad is damaged.
- The inlet valve has not closed.

© Edwards Limited 2013. All rights reserved.
Edwards and the Edwards logo are trade marks of Edwards Limited.

### 5.12.7 The pumping speed is poor

- The connecting pipelines are too small in diameter.
- The connecting pipelines are too long.
- The inlet-filter is blocked.

### 5.12.8 There is an external oil leak

- The outer shaft-seal is worn or damaged.
- The oil-box gaskets have deteriorated.
- There is an oil leak from the gas-ballast control.
- There is an oil leak from the drain-plug.
- There is an oil leak from the sight-glass.


© Edwards Limited 2013. All rights reserved.
Edwards and the Edwards logo are trade marks of Edwards Limited.

# 6 Storage and disposal

## 6.1 Storage

*CAUTION*

**Observe the storage temperature limits stated in Section 2.1. Storage below -30°C will permanently damage the pump seals.**

*Note: If a new pump is to be stored in conditions of high humidity, remove the pump from its cardboard packaging box; dispose of the box (refer to Section 6.2).*

Use the following procedure to store the pump:

1. Shut-down the pump as described in Section 4.8.
2. Disconnect the pump from the electrical supply.
3. Purge the vacuum system and the pump with dry nitrogen and disconnect the pump from the vacuum system.
4. Replace the oil as described in Section 5.4.
5. Place and secure protective covers over the inlet and outlet-ports.
6. Store the pump in cool, dry conditions until required for use. When required, prepare and install the pump as described in Section 3. If the pump has been stored for more than a year, before installing the pump it must be cleaned and overhauled as described in the instructions supplied with the clean and overhaul kit.

## 6.2 Disposal

Dispose of the pump and any components removed from it safely in accordance with all local and national safety and environmental requirements.

Take particular care with components and waste oil which have been contaminated with dangerous process substances.

Do not incinerate fluoroelastomer seals and O-rings.

© Edwards Limited 2013. All rights reserved.
Edwards and the Edwards logo are trade marks of Edwards Limited.

This page has been intentionally left blank.


© Edwards Limited 2013. All rights reserved.
Edwards and the Edwards logo are trade marks of Edwards Limited.

# 7 Service and spares

## 7.1 Introduction

Edwards products, spares and accessories are available from Edwards companies in Belgium, Brazil, China, France, Germany, Israel, Italy, Japan, Korea, Singapore, United Kingdom, U.S.A and a world-wide network of distributors. The majority of these centres employ Service Engineers who have undergone comprehensive Edwards training courses.

Order spare parts and accessories from the nearest Edwards company or distributor. When ordering, state for each part required:

- Model and Item Number of the equipment
- Serial number
- Item Number and description of part.

## 7.2 Service

Edwards products are supported by a world-wide network of Edwards Service Centres. Each Service Centre offers a wide range of options including: equipment decontamination; service exchange; repair; rebuild and testing to factory specifications. Equipment which has been serviced, repaired or rebuilt is returned with a full warranty.

The local Service Centre can also provide Edwards engineers to support on-site maintenance, service or repair of the equipment.

For more information about service options, contact the nearest Service Centre or other Edwards company.

## 7.3 Spares

See Table 13 for the spares and maintenance kits available for the RV pumps.

As of the end of 2009 improved motors have been fitted to RV pumps. These motors benefit from being fitted with an aluminium terminal box and externally accessible voltage change over switches. The introduction of these motors has resulted in the range of motors covering all voltage and frequency conditions being reduced from four variants to two. All motors are interchangeable and pump performance is not affected.

© Edwards Limited 2013. All rights reserved.
Edwards and the Edwards logo are trade marks of Edwards Limited.

**Table 13 - Spares and maintenance kits**

| Spare | Item Numbers | |
|---|---|---|
| | Hydrocarbon-prepared pumps | PFPE-prepared pumps |
| Ultragrade 19 oil, 1 litre | H110-25-015 | – |
| Ultragrade 19 oil, 4 litres | H110-25-013 | – |
| Fomblin 06/6 oil, 1 kg | – | H113-06-019 |
| Fomblin 06/6 oil, 5 kg | – | H113-06-020 |
| Clean and overhaul kit (Standard) | A652-01-131 | A652-01-131 |
| RV3 Blade kit | A652-01-130 | A652-01-130 |
| RV5 Blade kit | A653-01-130 | A653-01-130 |
| RV8 Blade kit | A654-01-130 | A654-01-130 |
| RV12 Blade kit | A655-01-130 | A655-01-130 |
| RV3 Cartridge Kit | A652-01-032 | A652-09-032 |
| RV5 Cartridge Kit | A653-01-032 | A653-09-032 |
| RV8 Cartridge Kit | A654-01-032 | A654-09-032 |
| RV12 Cartridge Kit | A655-01-032 | A655-09-032 |
| Inlet-valve kit | A652-01-036 | A652-01-036 |
| Motor Starting Relay Kit* | A505-74-000 | A505-74-000 |
| Outer Shaft-Seal Kit | A652-01-134 | A652-01-134 |
| Rotor Sleeve Kit | A652-01-136 | A652-09-136 |
| RV3/RV5 Motor Kit (Europe/USA/Japan)<br>50/60 Hz, 250/300 W, 3 phase, 200-230/380-460 V | A652-97-000 | A652-97-000 |
| RV8/RV12 Motor Kit (Europe/USA/Japan)<br>50/60 Hz, 450/550 W, 3 phase, 200-230/380-460 V | A654-97-000 | A654-97-000 |
| Clean and Overhaul Kit (Nitrile) | A652-01-137 | – |

* *For use with motors fitted with a plastic terminal box manufactured before January 2010.*


© Edwards Limited 2013. All rights reserved.
Edwards and the Edwards logo are trade marks of Edwards Limited.

## 7.4 Accessories

### 7.4.1 Introduction

The accessories which can be fitted to the RV pump are shown in Figure 10, and their Item Numbers are listed in Table 14.

These accessories are briefly described in Section 7.4.2 to 7.4.14.

**Table 14 - Accessory item numbers**

| Accessory | Refer to Section | Item Number |
|---|---|---|
| ITO20K Inlet catchpot | 7.4.2 | A441-10-000 |
| ITF20K Inlet dust filter | 7.4.3 | A442-15-000 |
| ITD20K Inlet desiccant trap | 7.4.4 | A445-10-000 |
| ITC20K Inlet chemical trap | 7.4.5 | A444-10-000 |
| FL20K Foreline trap | 7.4.6 | A133-05-000 |
| EMF10 Outlet mist filter | 7.4.7 | A462-26-000 |
| EMF20 Outlet mist filter | 7.4.7 | A462-29-000 |
| Gas-ballast adaptor | 7.4.8 | A505-02-000 |
| Gravity oil drain kit | 7.4.9 | A505-01-000 |
| Oil drain-extension | 7.4.10 | A505-03-000 |
| Exhaust nozzle kit | 7.4.11 | A505-09-000 |
| Vibration isolators (pack of four) | 7.4.12 | A248-01-404 |
| EBV20 Solenoid Operated Gas-Ballast Valve | 7.4.13 | |
| 220-240 V 50/60 Hz | | A500-06-930 |
| 100-120 V 50/60 Hz | | A500-06-984 |
| PV25EK Pipeline Valve (aluminium) | 7.4.14 | |
| 220-240 V 50/60 Hz | | C413-01-000 |
| 110-127 V 50/60 Hz | | C413-03-000 |
| PV25EK Pipeline Valve (stainless steel) | 7.4.14 | |
| 220-240 V 50/60 Hz | | C413-02-000 |
| 110-127 V 50/60 Hz | | C413-04-000 |

### 7.4.2 Inlet catchpot

The inlet catchpot traps any liquid droplets and prevents their entry into the pump.

### 7.4.3 Inlet dust filter

The inlet dust filter protects the pump against abrasive dust.

### 7.4.4 Inlet desiccant trap

Use a desiccant trap when the pump limited quantities of water vapour at high pumping speeds to a low vapour pressure.

© Edwards Limited 2013. All rights reserved.
Edwards and the Edwards logo are trade marks of Edwards Limited.

### 7.4.5 Inlet chemical trap

The inlet chemical trap protects the pump against chemically active gases.

### 7.4.6 Foreline trap

Use a foreline trap on a clean pumping system to prevent back-migration of pump-oil vapour into the vacuum system.

### 7.4.7 Outlet mist filter

The outlet mist filter separates and traps oil droplets in the pump outlet to prevent oil mist discharge.

### 7.4.8 Gas-ballast adaptor

Fit the gas-ballast adaptor in place of the gas-ballast control on the pump. The adaptor allows fitting of a solenoid operated gas-ballast valve or a controlled supply of inert gas to the pump.

### 7.4.9 Gravity oil drain kit

Fit the oil drain kit between the drain port of the outlet mist filter and the oil filler-plug on the pump. When the kit is fitted, oil will be returned from the mist filter to the pump when the pump is switched off or when the gas-ballast control is closed (in the ‘0’ position) and there is no process gas being pumped.

### 7.4.10 Oil drain-extension

Fit the oil drain-extension between the oil drain port on the pump and the oil drain-plug to make the drainage of oil from the pump easier.

### 7.4.11 Exhaust nozzle kit

The exhaust nozzle replaces the outlet flange. Use the exhaust nozzle to connect the pump outlet to 12 mm internal diameter plastic hose.

### 7.4.12 Vibration isolators

Vibration isolators reduce vibration and noise when the pump is floor or frame mounted and help to reduce strain when the mounting area is uneven.

### 7.4.13 Solenoid operated gas-ballast valve

Fit the gas-ballast valve in place of the built-in gas-ballast control on the pump; the gas-ballast adaptor (see Section 7.4.8) must be fitted with the solenoid operated gas-ballast valve. The valve provides automatic on/off control of the gas-ballast and isolates the gas-ballast inlet when the pump is switched off.

### 7.4.14 Solenoid operated pipeline valve

Fit the pipeline valve between the vacuum system and the pump-inlet to provide additional system protection when the pump is switched off.


© Edwards Limited 2013. All rights reserved.
Edwards and the Edwards logo are trade marks of Edwards Limited.

**Figure 10 - Accessories**

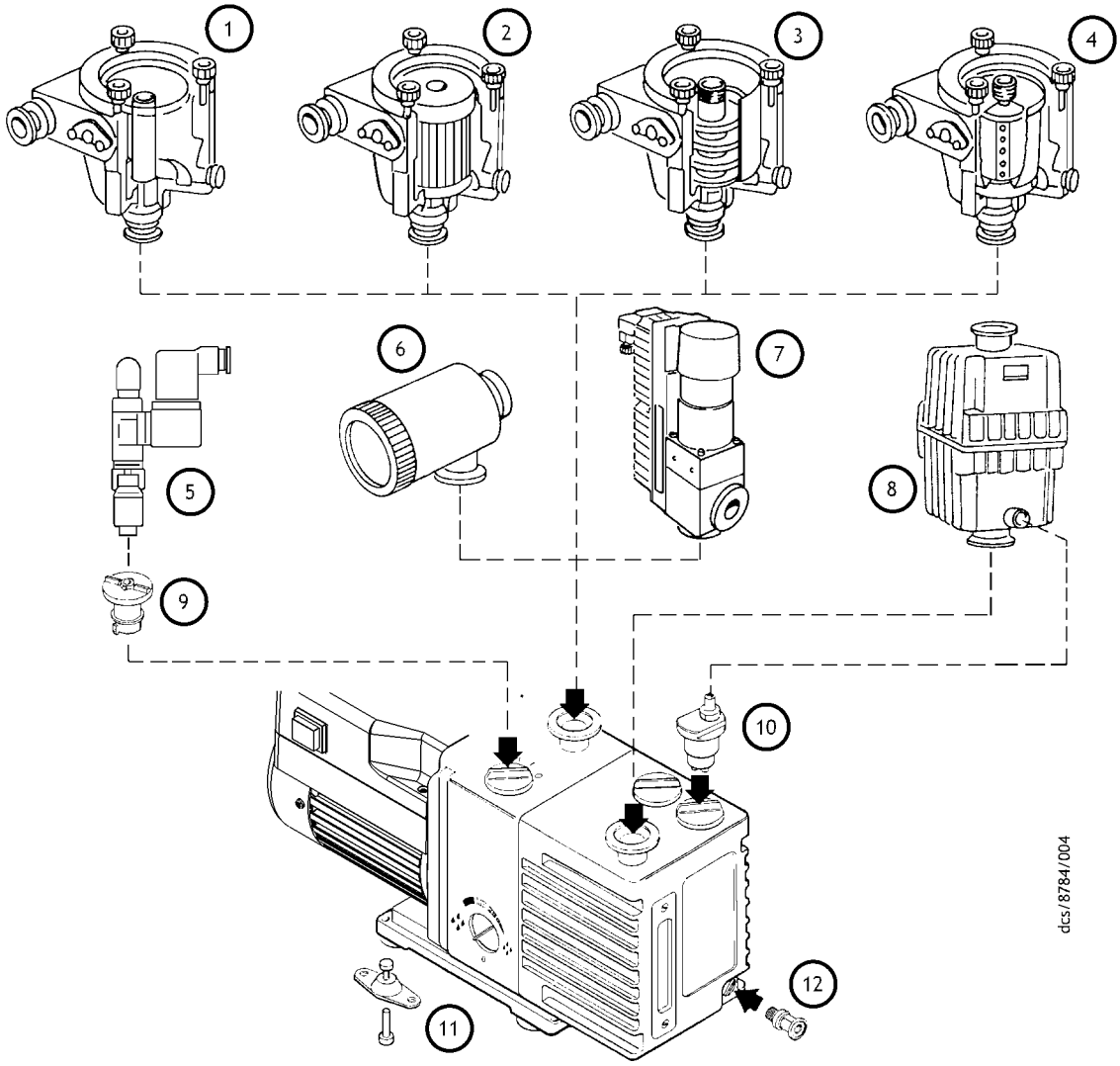


1. Inlet catchpot
2. Inlet dust filter
3. Inlet desiccant trap
4. Inlet chemical trap
5. Solenoid operated gas-ballast valve
6. Foreline trap
7. Solenoid operated pipeline valve
8. Outlet mist filter
9. Gas-ballast adaptor
10. Gravity oil drain kit
11. Vibration isolators
12. Oil drain-extension

© Edwards Limited 2013. All rights reserved.
Edwards and the Edwards logo are trade marks of Edwards Limited.

This page has been intentionally left blank.


© Edwards Limited 2013. All rights reserved.
Edwards and the Edwards logo are trade marks of Edwards Limited.

# 8 PFPE-prepared RV pumps

## 8.1 Summary

If a PFPE-prepared RV pump has been ordered, the pump will be supplied prepared for use with Edwards PFPE mechanical pump oils, such as Fomblin YVAC 06/6 and Krytox 1506.

PFPE-prepared RV pumps are suitable for pumping high concentrations of oxygen.

Refer to Edwards publication P400–40–100 (Vacuum pump and Vacuum System Safety) before installing and using a PFPE-prepared RV pump.

## 8.2 Installation

*CAUTION*

**Never use hydrocarbon lubricants in a PFPE-prepared pump.**

When filling the RV pump with oil (as described in Section 3.5), a suitable Edwards PFPE oil must be used. Do not use a hydrocarbon oil.

## 8.3 Operation

*WARNING*

**PFPE-prepared RV pumps are suitable for pumping high concentrations of oxygen, but Edwards recommends that PFPE-prepared RV pumps are not used for the pumping of hazardous materials.**

Operation of a PFPE-prepared RV pump is as specified in Section 4, but take note of the warning above.

## 8.4 Maintenance

*WARNING*

**Obey the safety instructions given below and take note of appropriate precautions. Failure to do so can cause injury to people.**

- Take additional care if it is suspected that the pump (and hence the PFPE oil) has overheated.
- Do not touch or inhale the thermal breakdown products of PFPE oil which may be present if the pump has been heated to 260°C and above. PFPE oils are safe in normal use but can decompose into very dangerous substances if they are heated to 260°C and above. The pump may have overheated if it was misused, if it malfunctioned, or if it was in a fire. Material Safety Data Sheets for PFPE oils used in the pump are available on request: contact the supplier or Edwards.

Fomblin oil has different properties from other pump oils, therefore:

- If the PFPE-prepared RV pump is filled with Fomblin oil, Edwards recommends regular checks for oil leaks are carried out, particularly around the shaft seals.
- If an oil leak is detected, contact the supplier or Edwards for advice.

© Edwards Limited 2013. All rights reserved.
Edwards and the Edwards logo are trade marks of Edwards Limited.

This page has been intentionally left blank.


© Edwards Limited 2013. All rights reserved.
Edwards and the Edwards logo are trade marks of Edwards Limited.

# 9 Bareshaft RV pumps

## 9.1 Description

Two types of bareshaft pump are available:

- To suit an IEC72-1 motor with an (IMB14) FT85 face mounting and 14 mm diameter shaft.
- To suit a NEMA 56C motor with a $^{5}/_{8}$ inch diameter shaft.

The motor to be fitted must have a power rating which is adequate for use with the RV pump: refer to the pump electrical data section in the manual.

*Note: The performance data given in Section 2 applies to pumps supplied with a motor fitted as standard. On a bareshaft pump, the performance may be affected by the type of motor fitted.*

## 9.2 Fit the motor to the bareshaft pump

1. Refer to Figure 11. Use the four screws (455) to fit the motor support (453) to the motor.
2. Use the two screws (422) to fit the lifting plate (413), then fit the lifting handle (414).
3. Fit the fan ducting sheet (409).
4. Ensure that key 'B' is in place on the motor shaft, then push the fan (410) onto the shaft. Ensure that:
   - The end of the shaft aligns with the bottom of the cavity in the fan.
   - The back of the fan is 2.5 mm from the ducting sheet.
5. Secure the fan to the shaft with the screw (454): tighten the screw to a torque between 7 and 9 Nm.
6. Use a suitable lubricant on the coupling element (411) then fit the element to the coupling hub.
7. Align the coupling element in the hub with the coupling in the fan and fit the motor to the pump.
8. Secure the motor with the four screws (421). Tighten the screws to a torque of between 10 and 12 Nm. Note that:
   - The gap between the coupling faces must be 2 mm or less.
   - If necessary, adjust the position of the coupling hub on the pump shaft so that the gap is correct.

© Edwards Limited 2013. All rights reserved.
Edwards and the Edwards logo are trade marks of Edwards Limited.

**Figure 11 - Fit the motor to a bareshaft pump**

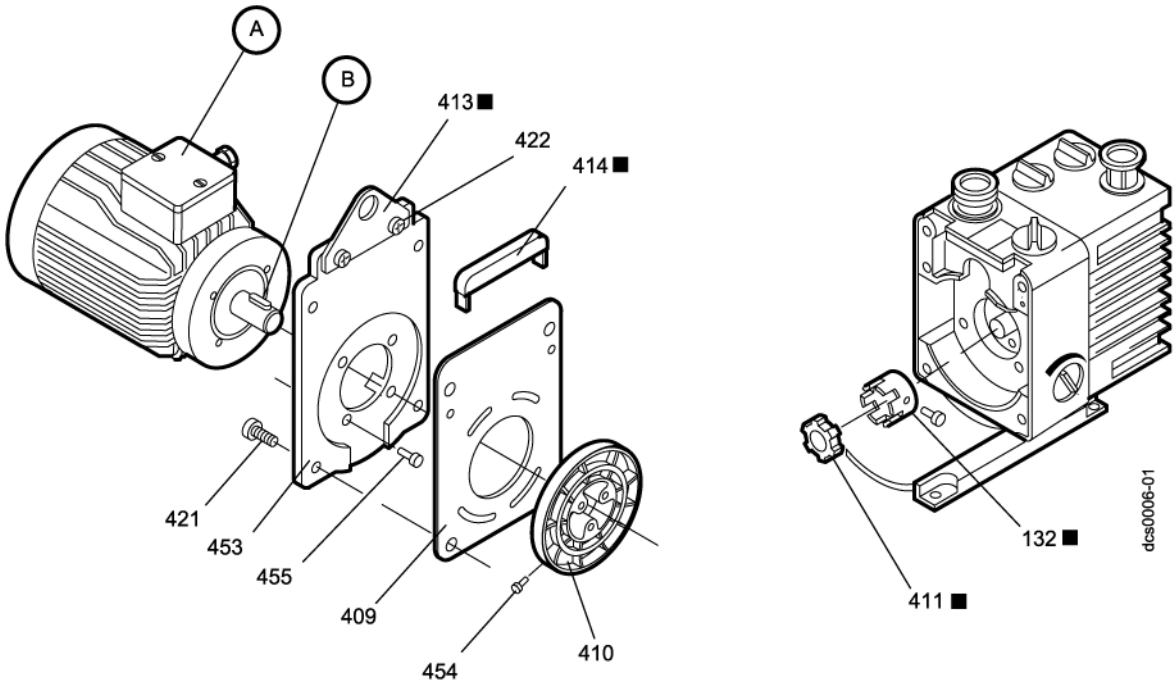


A. Pump motor
B. Key (in shaft)

132 Coupling hub
409 Ducting sheet
410 Fan
411 Coupling element
413 Lifting plate (RV8, RV12)
414 Lifting handle (RV3, RV5)
421 Screw
422 Nut and bolt
453 Motor support
454 Screw
455 Screw


© Edwards Limited 2013. All rights reserved.
Edwards and the Edwards logo are trade marks of Edwards Limited.