OPERATING INSTRUCTIONS

EN

Translation of the original instructions

TC 400

Electronic Drive Unit

PFEIFFER VACUUM

PT 0203 BEN/S (1710)

Table of contents

1 About this manual . . . 4
1.1 Validity . . . 4
1.2 Conventions . . . 4
1.2.1 Safety instructions . . . 4
1.2.2 Pictographs . . . 5
1.2.3 Instructions in the text . . . 5
1.2.4 Abbreviations . . . 5
2 Safety . . . 6
2.1 Safety precautions . . . 6
2.2 Proper use . . . 7
2.3 Improper use . . . 7
2.4 Functional safety . . . 7
3 Product description . . . 8
3.1 Product identification . . . 8
3.2 Range of application . . . 8
3.3 Function . . . 9
3.4 General connection description . . . 9
4 Connection diagram . . . 10
5 Connection "remote" . . . 11
5.1 Pin assignment . . . 11
5.2 Operation via "remote" connection . . . 12
5.2.1 +24 V DC* Output / Pin 1 . . . 12
5.2.2 Inputs . . . 12
5.2.3 Outputs . . . 13
5.2.4 Relay contacts (invertible) . . . 13
5.2.5 RS-485 . . . 14
6 Connection "RS-485" . . . 15
6.1 Connections . . . 15
6.2 Connecting Pfeiffer Vacuum display and control units or PC . . . 15
6.3 Cross-linking via the connection RS-485 . . . 16
7 The Pfeiffer Vacuum parameter set . . . 17
7.1 General . . . 17
7.1.1 Conventions . . . 17
7.2 Parameter overview . . . 17
7.2.1 Annotation . . . 17
7.2.2 Operation with DCU . . . 17
7.2.3 Control commands . . . 18
7.2.4 Status requests . . . 19
7.2.5 Set value settings . . . 20
7.3 Configuring the connections . . . 20
7.3.1 Accessory connection . . . 20
7.3.2 Digital outputs and relays on "remote" . . . 21
7.3.3 Digital inputs on "remote" . . . 22
7.3.4 Analog output on "remote" . . . 22
7.3.5 Analog input on "remote" . . . 22
7.3.6 Control via interface . . . 22
7.4 Operation with the Pfeiffer Vacuum parameter set . . . 23
7.4.1 Factory settings . . . 23
7.4.2 Checking the adjustments . . . 23
7.4.3 Gas type dependent operations . . . 23
7.4.4 Set value power consumption . . . 24

7.4.5 Run-up time . . . 24
7.4.6 Adjusting the rotation speed switchpoint . . . 24
7.4.7 Rotation speed setting mode . . . 25
7.4.8 Standby . . . 26
7.4.9 Rotation speed set value . . . 26
7.4.10 Operation mode backing pump . . . 26
7.4.11 Standby mode for the backing pump . . . 27
7.4.12 Operation with accessories . . . 27
7.4.13 Vent modes . . . 28
7.4.14 Monitoring the thermal load . . . 28
7.5 Switching on/off the pump . . . 29
7.5.1 Switching on . . . 29
7.5.2 Switching off . . . 29
8 Pfeiffer Vacuum Protocol for "RS-485" . . . 30
8.1 Telegram frame . . . 30
8.2 Telegrams . . . 30
8.2.1 Example 1 . . . 30
8.2.2 Example 2 . . . 31
8.3 Applied data types . . . 31
9 Malfunctions . . . 32
9.1 General . . . 32
9.2 Operation display via LED . . . 32
9.3 Error codes . . . 32
7.2.2 Operation with DCU . . . 17
Declaration of conformity . . . 35

1 About this manual

1.1 Validity

This operating manual is for customers of Pfeiffer Vacuum. It describes the functioning of the designated product and provides the most important information for safe use of the unit. The description follows applicable EU guidelines. All information provided in this operating manual refers to the current state of the product's development. The documentation remains valid as long as the customer does not make any changes to the product.

Up-to-date operating instructions can also be downloaded from www.pfeiffer-vacuum.com.

1.2 Conventions

1.2.1 Safety instructions

The safety instructions in Pfeiffer Vacuum operating instructions are the result of risk evaluations and hazard analyses and are oriented on international certification standards as specified by UL, CSA, ANSI Z-535, SEMI S1, ISO 3864 and DIN 4844. In this document, the following hazard levels and information are considered:

DANGER
Imminent danger Indicates an imminent hazardous situation that will result in death or serious injury.

WARNING
Possibly imminent danger Indicates an imminent hazardous situation that can result in death or serious injury.

CAUTION
Possibly imminent danger Indicates an imminent hazardous situation that can result in minor or moderate injury.

NOTICE
Command or note Command to perform an action or information about properties, the disregarding of which may result in damage to the product.

1.2.2 Pictographs

Prohibition of an action to avoid any risk of accidents, the disregarding of which may result in serious accidents

Warning of a displayed source of danger in connection with operation of the unit or equipment

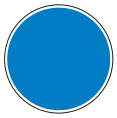

Command to perform an action or task associated with a source of danger, the disregarding of which may result in serious accidents

Important information about the product or this document

1.2.3 Instructions in the text

➔ Work instruction: here you have to do something.

1.2.4 Abbreviations

DCU:	Display Control Unit
HPU:	Handheld Programming Unit
TC:	Electronic drive unit for turbopump
TPS:	Mains pack
DI / DO:	Digital input / digital output
AI / AO:	Analog input / analog output
f:	Rotation speed (derivated from frequency in Hz)
[P:000]:	Parameter of the electronic drive unit with number

2 Safety

2.1 Safety precautions

Duty to inform

Each person involved in the installation or operation of the unit must read and observe the safety-related parts of these operating instuctions.

➔ The operator is obligated to make operating personnel aware of dangers originating from the unit or the entire system.

WARNING

Danger of unsafe electrical installation

Safe operation after installation is the responsibility of the operator.

➔ Do not independently modify or change the pump and electrical equipment.
➔ Make sure that the system is integrated in an emergency off safety circuit.
➔ Consult Pfeiffer Vacuum for special requirements.

WARNING

Danger of electric shock

In case of defect, the parts connected to the mains supply are under voltage.

➔ Always keep the mains connection freely accessible so that you can disconnect it at any time.

- **Power supply:** The turbopump power supply must apply to the requirements of double insulation between mains input voltage and operating voltage according to the regulations of IEC 61010 and IEC 60950. Therefore Pfeiffer Vacuum recommends to use exclusively original-power packs and -accessories. Only in this case Pfeiffer Vacuum is able to guarantee the compliance of the European and North American guidelines.
- Observe all safety and accident prevention regulations.
- A safe connection to the protective earthing conductor (PE) is recommended (protection class III).
- Regularly check the proper observance of all safety measures.
- Before carrying out any work disconnect the unit and all associated installations safely from the mains.
- Do not loosen any plug connection during operations.
- The unit has been accredited with protection class IP 54. Take necessary measures when installing into ambient conditions, which afford other protection classes.
- Keep leads and cables well away from hot surfaces (> 70 °C).
- Only separate the pump and the electronic drive unit from each other after disconnecting the supply voltage and the complete standstill of the pump.

2.2 Proper use

NOTICE

EC conformity

The manufacturer's declaration of conformity becomes invalid if the operator modifies the original product or installs additional components.

➔ Following installation into a plant and before commissioning, the operator must check the entire system for compliance with the valid EU directives and reassess it accordingly.

- The electronic drive unit TC 400 operates designated Pfeiffer Vacuum turbopumps and their accessories.

2.3 Improper use

Improper use will cause all claims for liability and warranties to be forfeited. Improper use is defined as usage for purposes deviating from those mentioned above, especially:

- use of accessories or spare parts, which are not named in this manual
- operation of the devices in areas with ionizing radiation

warranty seal
PFEIFFER VACUUM

Closure seal

The product is sealed at the factory. Damaging or removal of a closure seal leads to the loss of liability and warranty entitlements.

➔ Do not open the product within its warranty period!

➔ For process-related shorter maintenance intervals please contact the Pfeiffer Vacuum Service.

2.4 Functional safety

The drive unit (electronic drive unit) TC 400 performs the safety function "Safe Limited Speed" according to EN 61800-5-2. In case of excess rotation speed the commutation of the pump motor is switched off and the drive transferred into the safe condition.

Summary of characteristic data for use in safety-relevant applications:

Characteristics according to IEC 61508 and IEC 62061				
Characteristic	Safety Integrity Level	PFH	PFD_{av}	Proof Test Interval T
Value	SIL CL 2	$1.1 * 10^{-8}$ / h	$1 * 10^{-3}$	20 a

Characteristics according to EN ISO 13849-1				
Characteristic	Performance Level	Category	$MTTF_d$	Average Diagnostic Coverage DC
Value	PL d	Cat. 3	high (135 a)	medium (90 % - <99 %)

- During the expected device life span of up to 20 years no proof test is required.
- If the user calculates his safety application with the specified values for 20 years, the safety control system must be taken out of operation after 20 years and returned to the manufacturer. A proof test cannot be accomplished by the user.

3 Product description

3.1 Product identification

The electronic drive unit TC 400 is an integrated component of the turbopump. It's purpose is to drive, monitor and control the entire pump.

Characteristics	TC 400	
Connection voltage TC	24 V DC ±10 %	48 V DC ±10 %
Connection panel	Standard (RS-485)	Standard (RS-485)
Turbopump HiPace	300, 400, 700, 800	300, 400, 700, 800

To correctly identify the product when communicating with Pfeiffer Vacuum, always have the information from the rating plate available.

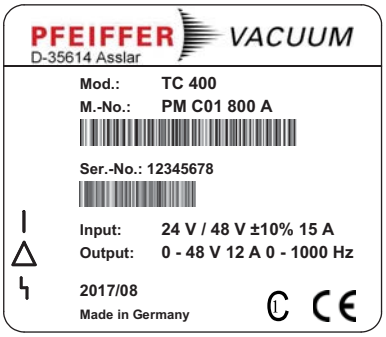

Fig. 1: Example for a rating plate

3.2 Range of application

Pfeiffer Vacuum electronic drive units TC 400 must be installed and operated in the following ambient conditions.

Installation location	weather protected (indoors)
Protection category	IP 54
Protection class	III
Temperature	+5 °C to +40 °C (up to +35 °C with air cooling)
Relative humidity	max. 80 %, at T ≤ 31 °C, up to max. 50% at T ≤ 40 °C
Atmospheric pressure	750 hPa - 1060 hPa
Installation altitude	5000 m max.
Degree of pollution	2
Overvoltage category	II

3.3 Function

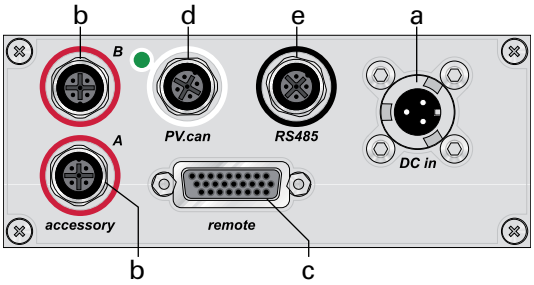

Fig. 2: Standard panel for the TC 400

a	Mains connection "*DC in*"	d	Service connection "*PV.can*"
b	Connection "*accessory A+B*"	e	Connection "*RS-485*"
c	Connection "*remote*"		

3.4 General connection description

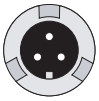	***DC in***[1] Casing plug with bayonet locking for the voltage supply between Pfeiffer Vacuum mains packs and the electronic drive unit TC.
	accessory M12 socket with screw coupling for the connection of Pfeiffer Vacuum accessories. The use of a Y-connector enables double assignment of one connection.
	PV.can M12 casing socket with screw coupling and LED for the connection of an integrated pressure measurement and for Pfeiffer Vacuum Service purposes.
	remote High Density D-sub 26 pole female socket for the connection of a remote control.
	RS485 M12 socket with screw coupling for the connection of a Pfeiffer Vacuum control unit or a PC. The use of a Y-connector enables the series connection in a bus system.
	Casing socket on the rear side of the electronic drive unit for the connection to the turbopump.

1. "DC in" and "accessory" are already described in the operating instructions of the turbopump.

4 Connection diagram

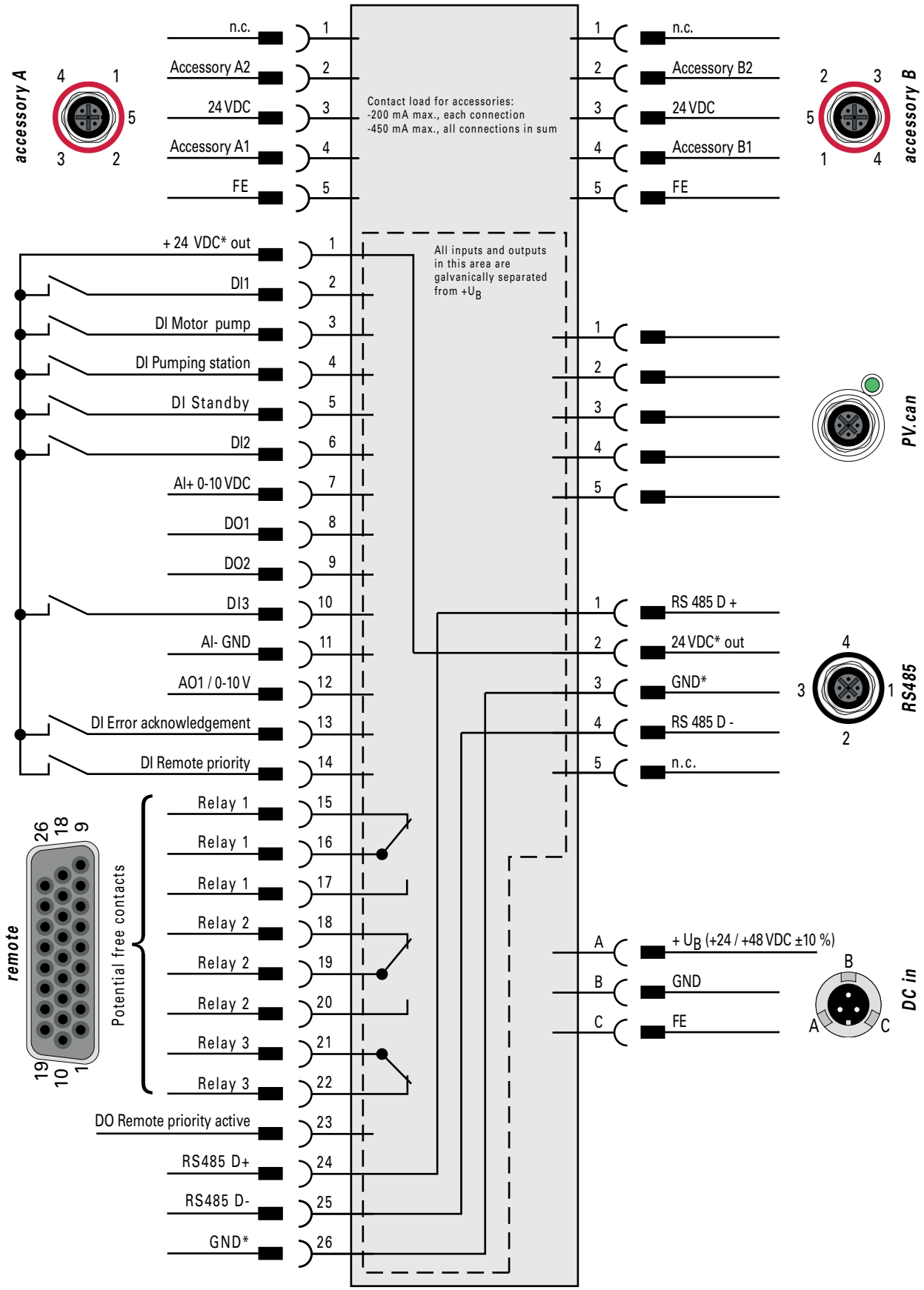

Fig. 3: Connection diagram and assignment of the TC 400

5 Connection "*remote*"

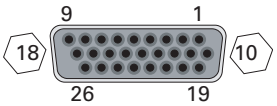

Remote control is possible via the 26-pin D-sub connector labelled "*remote*" on the electronic drive unit. The accessible individual functions are mapped to "PLC levels".

➔ Remove the remote plug from the TC 400 and connect a remote control unit. Pin assignment of the connector according to table.

➔ Shielded connectors and cables must be used.

NOTICE

Danger of the drive unit being destroyed

Cutting the plug connection "*remote*" can lead to the destruction of the electronic drive unit, when the power supply is still switched on.

➔ Before pulling the connector "*remote*" necessarily disconnect the power supply.

➔ Switch off the power supply unit.

The following information display the factory setting. Configuration is possible using the Pfeiffer Vacuum parameter set.

5.1 Pin assignment

Pin	Function	Designation factory settings
1	+24 V DC output (V+)	Reference voltage for all digital in- and outputs
2	DI1	Enable venting; open: no; V+: yes
3	DI Motor pump	Drive motor; open: off; V+: on
4	DI Pumping station	Open: off; V+: on and error acknowledgement
5	DI Standby	Standby rotation speed; open: off; V+: on
6	DI2	Heating; open: off; V+: on
7	AI+ Rotation speed setting mode	Set value in rotation speed setting mode; 2-10 V DC = 20-100% of the nominal rotation speed
8	DO1	Rotation speed switch point attained; GND:no; V+: yes (I_{max} = 50 mA/24 V)
9	DO2	GND: error; V+: no error (I_{max} = 50 mA/24 V)
10	DI3	Sealing gas; open: off; V+: on
11	AI- Rotation speed setting mode GND	Set value in rotation speed setting mode; GND
12	AO1	Actual rotation speed; 0-10 V DC is equivalent to 0-100%; R_L > 10 kΩ
13	DI Error acknowledgement	Error acknowledgement: V+ pulse (min 500 ms)
14	DI Remote priority	Control via interface "remote"; open: off V+: set and priority over other digital inputs
15	Relais 1	Connection to Pin 16 if relay 1 is inactive
16	Relais 1	Rotation speed switchpoint attained; relay contact 1 (U_{max} = 50 V DC; I_{max} = 1 A)
17	Relais 1	Connection to Pin 16 if relay 1 is active
18	Relais 2	Connection to Pin 19 if relay 2 is inactive
19	Relais 2	No error; relay contact 2 (U_{max} = 50 V DC; I_{max} = 1 A)
20	Relais 2	Connection to Pin 19 if relay 2 is active
21	Relais 3	Connection to Pin 22 if relay 3 is inactive
22	Relais 3	Warning; relay contact 3 (U_{max} = 50 V DC; I_{max} = 1 A)
23	DO Remote priority	GND: off; V+: remote priority active
24	RS-485 D+	according to specifications and Pfeiffer Vacuum protocol
25	RS-485 D-	according to specifications and Pfeiffer Vacuum protocol
26	Ground (GND)	Reference ground for all digital inputs and all outputs

5.2 Operation via "*remote*" connection

5.2.1 +24 V DC* Output / Pin 1

Inputs 2 - 6 and the connections to Pins 10, 13, 14 are activated by connecting them with +24 V DC to Pin 1 (active high). They can also be activated via an external PLC. The functions are deactivated by "PLC high level" and by "PLC low level".

- PLC high level: +13 V to +33 V
- PLC low level: -33 V to +7 V
- Ri: 7 kΩ
- I_{max} < 210 mA (with RS-485, if existing)

5.2.2 Inputs

The digital inputs at connection "*remote*" are used to connect various functions of the electronic drive unit. Functions are assigned to the inputs DI1 - DI2 ex factory. These can be configured via interface RS-485 and the Pfeiffer Vacuum parameter set.

DI1 (Enable venting) / Pin 2

V+ : Venting is enabled (venting according to venting mode)

open: Venting locked (no venting is performed)

DI Motor pump / Pin 3

After Pin 4 (pumping station) is activated and the electronic drive unit successfully completes the self-test, the turbopump is placed into operation. During operation, the turbopump can be switched off and on again, while the pumping station remains switched on. The turbopump is not vented thereby.

V+ : Turbopump motor on

open: Turbopump motor off

DI Pumping station / Pin 4

Connected pumping station components (e.g. backing pump, venting valve, air cooling unit) are triggered and, with Pin 3 (motor) simultaneously activated, the turbopump is placed in operation. Any ongoing error messages are reset when their cause has been eliminated.

V+ : Malfunction acknowledgement and pumping station on

open: Pumping station off

DI Standby / Pin 5

In standby mode, the turbopump operates at a specified rotor speed < nominal rotation speed. Factory setting and recommended operation are 66.7 % of the nominal rotation speed.

V+ : Standby activated

open: Standby off, operation at nominal rotation speed

DI2 (Heating) / Pin 6

V+ : Heating on

open: Heating off

DI3 (Sealing gas) / Pin 10

V+ : Sealing gas valve open

open: Sealing gas valve closed

DI Error acknowledgement / Pin 13

V+ : Reset ongoing error messages when cause has been eliminated with a pulse of min. 500 ms duration.

open: Inactive

DI Remote priority / Pin 14

V+ : The connection "*remote*" has operation priority over all other digital inputs.

open: Remote priority inactive

AI Rotation speed setting mode / Pin 7 and Pin 11

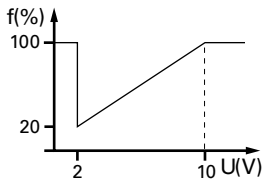

The analog input defines the set rotation speed of the turbopump. An input signal of 2 - 10 V between AI+ (Pin 7) and GND (Pin 11) corresponds to a rotation speed within the range of 20 - 100% of the nominal rotation speed. If the input is open or signals fall below 2 V, the pump is accelerated up to nominal rotation speed.

5.2.3 Outputs

The digital outputs at the connection "*remote*" can be loaded with a maximum of 24 V / 50 mA per output. All outputs listed below are configurable by the Pfeiffer Vacuum parameter set via interface RS-485 (description related to factory settings).

DO1 (Rotation speed switchpoint attained) / Pin 8

Active high after the rotation speed switchpoint is attained. Rotation speed switchpoint 1 is factory-set to 80% of the nominal rotation speed. It can, for example, be used for a "pump operational" message.

DO2 (No errors) / Pin 9

When the supply voltage has been established, digital output DO2 permanently outputs 24 V DC which means "no errors". Active low in case of error (collective error message).

DO Remote priority active / Pin 23

Active high: The connection "*remote*" takes priority over any other connected control panels (e.g. RS-485). With active low, the connection "*remote*" is ignored.

AO1 Analog output 0-10 V DC / Pin 12

A rotation-speed-proportional voltage (0-10 V DC equals 0 - 100 % x $f_{Nominal}$) can be picked up via the analog output (load R ≥ 10 kΩ). Additional functions (optionally current/ power) can be assigned to the analog output via DCU, HPU or PC.

5.2.4 Relay contacts (invertible)

Relay 1 / Pin 15, Pin 16 and Pin 17

The contact between Pin 16 and Pin 15 is closed when the rotation speed switch point is underrun; relay 1 is inactive. The contact between Pin 16 and Pin 17 is closed when the rotation speed switch point is attained; relay 1 is active.

Relay 2 / Pin 18, Pin 19 and Pin 20

The contact between Pin 19 and Pin 18 is closed when a malfunction is present; relay 2 is inactive. The contact between Pin 19 and Pin 20 is closed when operation is malfunction free; relay 2 is active.

Relay 3 / Pin 21 and Pin 22

The contact between Pin 21 and Pin 22 is closed when no warning messages are active; relay 3 is inactive. The contact between Pin 21 and Pin 22 is open when a warning message is present; relay 3 is active.

5.2.5 RS-485

One Pfeiffer Vacuum display and control panel (DCU **or** HPU) **or** an external PC can be connected respectively to the electronic drive unit via Pin 24 and Pin 25 of the connection "*remote*" on the electronic drive unit.

➔ Establish the connections according to the specification of the interface RS-485.

6 Connection "*RS-485*"

6.1 Connections

A Pfeiffer Vacuum display and control panel (DCU **or** HPU) **or** an external PC can be connected to the electronic drive unit via the connection designated "RS-485". The interface is electrically isolated from the maximum supply voltage of the electronic drive unit. The electrical couplings are optically decoupled internally.

Designation	Value
Serial interface	RS-485
Baud rate	9600 bauds
Data word length	8 bits
Parity	none (no parity)
Start bits	1
Stop bits	1

Pin	Assignment
1	RS-485: D+
2	+24 V output, loadable with ≤ 210 mA (with remote - pin 1)
3	GND
4	RS-485: D-
5	not connected

6.2 Connecting Pfeiffer Vacuum display and control units or PC

➔ Use the connection cable supplied with the control panel or from the range of accessories.

➔ The connection of respectively one external operating unit is possible on the interface RS-485.

➔ A USB interface (PC) can be connected via the USB/RS-485-converter.

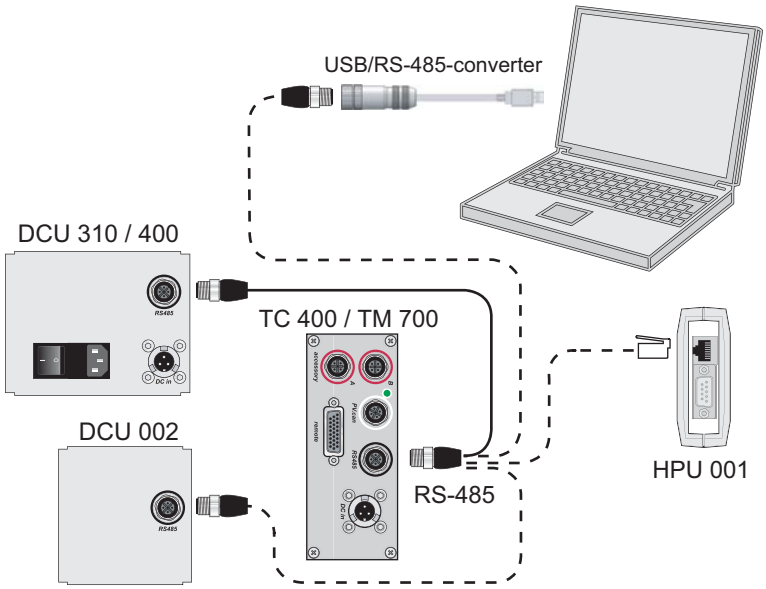

Fig. 4: Optional connection possibilities for interface RS-485

6.3 Cross-linking via the connection RS-485

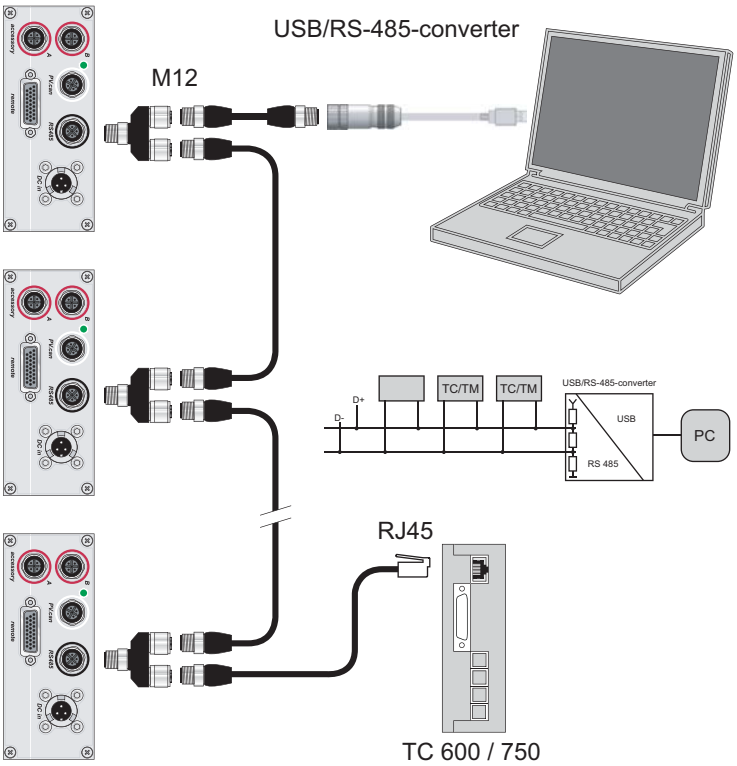

CAUTION

Danger of electric shock

The insulation measures of the bus system are designed only for use with safety extra-low voltage.

➔ Connect only suitable devices to the bus system.

➔ Establish the connections according to the specification of the interface RS-485.

➔ Connect all units with RS-485 D+ and RS-485 D- to the bus.

- The group address of the electronic drive unit is 962.
- All units connected to the bus must have differing RS-485 device addresses **[P:797]**.

7 The Pfeiffer Vacuum parameter set

7.1 General

All function-relevant variables of a turbopump are anchored in the electronic drive unit as parameters. Each parameter has a three-digit number and a designation. Parameters can be used via Pfeiffer Vacuum display and control units or via RS-485 with the Pfeiffer Vacuum protocol.

Additional parameters in the control unit

For the control of connected external components (e.g. vacuum measurement devices) there are additional parameters fixed in the respective Pfeiffer Vacuum display and control unit.

➔ Please consider the respective operating instructions.

7.1.1 Conventions

Parameters are displayed in square brackets as a three-digit number in bold font. The designation may also be stated if necessary.

Example: **[P:312] Software version**

7.2 Parameter overview

7.2.1 Annotation

#	Three figure number of the parameter
Display	Display of the parameter name in the LCD * = Representation as a symbol, if necessary
Designation	Short description of the parameter
Functions	Functional description of the parameter
Data type	Type of formatting of the parameter for the use within the Pfeiffer Vacuum protocol
Access method	R: read access; W: write access
Unit	Physical unit of the described characteristic
min / max	Permissible limits for value input
default	Factory settings (partially specific of the pump type)
🖫	Parameter can be stored non volatile in the electronic drive unit and may be re-used after resetting of the mains supply.

7.2.2 Operation with DCU

Parameter set and Pfeiffer Vacuum display and control unit

Pfeiffer Vacuum display and control units DCU show the basic parameter set by default. Furthermore the DCU contains parameters, which are not positioned in the electronic drive unit.

➔ Parameter **[P:794]** = 1 (Display of all available parameters).

#	Display	Designation	Functions	Data type	Access method	Unit	min	max	default	🖫
340	Pressure	Pressure value (ActiveLine)		7	R	hPa	1E-10	1E3		
350	Ctr Name	Type of display and control unit		4	R					
351	Ctr Software	Software of display and control unit		4	R					
738	Gaugetype	Type of pressure gauge		4	RW					
794	Param set	Parameterset	0 = basic parameter set 1 = extended parameter set	7	RW		0	1	0	
795	Servicelin	Insert service line		7	RW				795	

7.2.3 Control commands

#	Display	Designation	Functions	Data type	Access	Unit	min	max	default	🖫
001	Heating	Heating	0 = off 1 = on	0	RW		0	1	0	x
002	Standby	Standby	0 = off 1 = on	0	RW		0	1	0	x
004	RUTimeCtrl	Run-up time control	0 = off 1 = on	0	RW		0	1	1	x
009	ErrorAckn	Error acknowledgement	1 = Error acknowledgement	0	W		1	1		
010	PumpgStatn	Pumping station	0 = off 1 = on and error acknowledgement	0	RW		0	1	0	x
012	EnableVent	Enable venting	0 = no 1 = yes	0	RW		0	1	0	x
017	CfgSpdSwPt	Configuration rotation speed switchpoint	0 = Rotation speed switchpoint 1 1 = Rotation speed switchpoint 1&2	7	RW		0	1	0	x
019	Cfg DO2	Configuration output DO2	0 = Rot. speed switchpoint attained 1 = No error 2 = Error 3 = Warning 4 = Error and/or warning 5 = Set speed attained 6 = Pump on 7 = Pump accelerates 8 = Pump decelerates 9 = always 0 10 = always 1 11 = Remote priority active 12 = Heating 13 = Backing pump 14 = Sealing gas 15 = Pumping station 16 = Pump rotates 17 = Pump does not rotate 19 = Pressure switchpoint 1 underrun 20 = Pressure switchpoint 2 underrun 21 = Fore-vacuum valve, delayed 22 = Backing pump standby	7	RW		0	22	1	x
023	MotorPump	Motor pump	0 = off 1 = on	0	RW		0	1	0	x
024	Cfg DO1	Configuration output DO1	Options see **[P:019]**	7	RW		0	21	0	x
025	OpMode BKP	Operation mode backing pump	0 = Continous operating 1 = Intermittend mode 2 = Delayed switch-on	7	RW		0	2	0	x
026	SpdSetMode	Rotation speed setting mode	0 = off 1 = on	7	RW		0	1	0	x
027	GasMode	Gas mode	0 = Heavy gases 1 = Light gases 2 = Helium	7	RW		0	2	0	x
028	Cfg Remote	Configuration remote	0 = Standard 4 = Relais inverted	7	RW		0	4	0	x
030	VentMode	Venting mode	0 = Delayed venting 1 = No venting 2 = Direct venting	7	RW		0	2	0	x
035	Cfg Acc A1	Configuration accessory connection A1	0 = Fan (continous operation) 1 = Venting valve, normally closed 2 = Heating 3 = Backing pump 4 = Fan (temperature controlled) 5 = Sealing gas 6 = always 0 7 = always 1 8 = Power failure venting unit 9 = TMS heating 10 = TMS cooling 12 = second venting valve 13 = Sealing gas monitoring	7	RW		0	13	0	x
036	Cfg Acc B1	Configuration accessory connection B1	Options see **[P:035]**	7	RW		0	12	1	x
037	Cfg Acc A2	Configuration accessory connection A2	Options see **[P:035]**	7	RW		0	12	3	x
038	Cfg Acc B2	Configuration accessory connection B2	Options see **[P:035]**	7	RW		0	12	2	x

#	Display	Designation	Functions	Data type	Access	Unit	min	max	default	🖫
041	Press1HVen	Enable integrated HV Sensor (IKT only)	0 = off 1 = on 2 = on, when rotation speed switchpoint attained 3 = on, when pressure switchpoint underrun	7	RW		0	3	2	x
045	Cfg Rel R1	Configuration Relay 1	Options see **[P:019]**	7	RW		0	21	0	x
046	Cfg Rel R2	Configuration Relay 2	Options see **[P:019]**	7	RW		0	21	1	x
047	Cfg Rel R3	Configuration Relay 3	Options see **[P:019]**	7	RW		0	21	3	x
050	SealingGas	Sealing gas	0 = Off 1 = On	0	RW		0	1	0	x
055	Cfg AO1	Configuration output AO1	0 = Actual rotation speed 1 = Power 2 = Current 3 = always 0 V 4 = always 10 V 5 = follows AI1 6 = Pressure value 1 7 = Pressure value 2 8 = Control fore-vacuum	7	RW		0	8	0	x
057	Cfg AI1	Configuration input AI1	0 = Disconnected 1 = Set value rot. speed setting mode	7	RW		0	1	1	x
060	CtrlViaInt	Control via interface	1 = Remote 2 = RS-485 4 = PV.can 8 = Field bus 16 = E74 255 = Unlock interface selection	7	RW		1	255	1	x
061	IntSelLckd	Interface selection locked	0 = off 1 = on	0	RW		0	1	0	x
062	Cfg DI1	Configuration input DI1	Settings ≠ **[P:063/064]** 0 = deactivated 1 = Enable venting 2 = Heating 3 = Sealing gas 4 = Run-up time control 5 = Rotation speed setting mode 7 = Enable HV sensor	7	RW		0	7	1	x
063	Cfg DI2	Configuration input DI2	Options see **[P:062]** Settings ≠ **[P:062/064]**	7	RW		0	7	2	x
064	Cfg DI3	Configuration input DI3	Options see **[P:062]** Settings ≠ **[P:062/063]**	7	RW		0	7	3	x

7.2.4 Status requests

#	Display	Designation	Functions	Data type	Access	Unit	min	max	default	🖫
300	RemotePrio	Remote priority	0 = no 1 = yes	0	R		0	1		
302	SpdSwPtAtt	Rotation speed switchpoint attained	0 = no 1 = yes	0	R		0	1		
303	Error code	Error code		4	R					
304	OvTempElec	Excess temperature electronic drive unit	0 = no 1 = yes	0	R		0	1		
305	OvTempPump	Excess temperature pump	0 = no 1 = yes	0	R		0	1		
306	SetSpdAtt	Set rotation speed attained	0 = no 1 = yes	0	R		0	1		
307	PumpAccel	Pump accelerates	0 = no 1 = yes	0	R		0	1		
308	SetRotSpd	Set rotation speed (Hz)		1	R	Hz	0	999999		
309	ActualSpd	Active rotation speed (Hz)		1	R	Hz	0	999999		
310	DrvCurrent	Drive current		2	R	A	0	9999.99		
311	OpHrsPump	Operating hours pump		1	R	h	0	65535		x
312	Fw version	Firmware version electronic drive unit		4	R					
313	DrvVoltage	Drive voltage		2	R	V	0	9999.99		
314	OpHrsElec	Operating hours electronic drive unit		1	R	h	0	65535		x
315	Nominal Spd	Nominal rotation speed (Hz)		1	R	Hz	0	999999		

#	Display	Designation	Functions	Data type	Access	Unit	min	max	default	🖫
316	DrvPower	Drive power		1	R	W	0	999999		
319	PumpCycles	Pump cycles		1	R		0	65535		x
324	TempPwrStg	Temperature power stage		1	R	°C	0	999999		
326	TempElec	Temperature electronic		1	R	°C	0	999999		
330	TempPmpBot	Temperature pump bottom part		1	R	°C	0	999999		
336	AccelDecel	Acceleration / Deceleration		1	R	rpm/s	0	999999		
337	SealGasFlw	Sealing gas flow		1	R	sccm	0	999999		
342	TempBearng	Temperature bearing		1	R	°C	0	999999		
346	TempMotor	Temperature motor		1	R	°C	0	999999		
349	ElecName	Name of electronic drive unit		4	R					
354	HW Version	Hardware version electronic drive unit		4	R					
360	ErrHist1	Error code history, pos. 1		4	R					x
361	ErrHist2	Error code history, pos. 2		4	R					x
362	ErrHist3	Error code history, pos. 3		4	R					x
363	ErrHist4	Error code history, pos. 4		4	R					x
364	ErrHist5	Error code history, pos. 5		4	R					x
365	ErrHist6	Error code history, pos. 6		4	R					x
366	ErrHist7	Error code history, pos. 7		4	R					x
367	ErrHist8	Error code history, pos. 8		4	R					x
368	ErrHist9	Error code history, pos. 9		4	R					x
369	ErrHist10	Error code history, pos. 10		4	R					x
384	TempRotor	Temperature rotor		1	R	°C	0	999999		
397	SetRotSpd	Set rotation speed (rpm)		1	R	rpm	0	999999		
398	ActualSpd	Actual rotation speed (rpm)		1	R	rpm	0	999999		
399	NominalSpd	Nominal rotation speed (rpm)		1	R	rpm	0	999999		

7.2.5 Set value settings

#	Display	Designation	Functions	Data type	Access method	Unit	min	max	default	🖫
700	RUTimeSVal	Set value run-up time		1	RW	min	1	120	8	x
701	SpdSwPt1	Rotation speed switchpoint 1		1	RW	%	50	97	80	x
707	SpdSVal	Set value in rot. speed setting mode		2	RW	%	20	100	65	x
708	PwrSVal	Set value power consumption		7	RW	%	10	100	100[1]	x
710	Swoff BKP	Switching off threshold backing pump in intermittend mode		1	RW	W	0	1000	0	x
711	SwOn BKP	Switching on threshold backing pump in intermittend mode		1	RW	W	0	1000	0	x
717	StdbySVal	Set value rotation speed at standby		2	RW	%	20	100	66.7	x
719	SpdSwPt2	Rotation speed switchpoint 2		1	RW	%	5	97	20	x
720	VentSpd	Venting rot. speed at delayed venting		7	RW	%	40	98	50	x
721	VentTime	Venting time at delayed venting		1	RW	s	6	3600	3600	x
730	PrsSwPt 1	Pressure switchpoint 1		10	RW	hPa				x
732	PrsSwPt 2	Pressure switchpoint 2		10	RW	hPa				x
739	PrsSn1Name	Name sensor 1		4	R					
740	Pressure 1	Pressure value 1		10	RW	hPa				x
742	PrsCorrPi 1	Correction factor 1		2	RW					x
749	PrsSn2Name	Name sensor 2		4	R					
750	Pressure 2	Pressure value 2		10	RW	hPa				x
752	PrsCorrPi 2	Correction factor 2		2	RW					x
777	NomSpdConf	Nominal rotation speed confirmation		1	RW	Hz	0	1500	0	x
791	SlgWrnThrs	Sealing gas warning threshold		1	RW	sccm	5	200	15	x
797	RS485Adr	RS-485 device address		1	RW		1	255	1	x

1. depending on the pump type

7.3 Configuring the connections

The electronic drive unit is pre-configured in the factory. Thereby the turbopump is immediately operational with the necessary functions. The connections of the electronic drive unit can be configured to suit individual requirements using the parameter set.

7.3.1 Accessory connection

➔ Configuration via parameters **[P:035]**, **[P:036]**, **[P:037]** or **[P:038]**.

Option	Description
0 = Fan (continuous operation)	Control via parameter for pumping station
1 = Venting valve, normally closed	Control via parameter to enable venting. When using a normally closed venting valve
2 = Heater	Control via parameters for heating and speed switching point reached
3 = Backing pump	Control via parameters for pumping station and backing pump operating mode
4 = Fan (temperature regulated)	Control via parameters for pumping station and temperature thresholds
5 = Sealing gas	Control via parameters for pumping station and sealing gas
6 = Always 0	GND for control of an external device
7 = Always 1	+24 V DC for control of an external device
8 = Power fail venting	Control via parameter to enable venting. When using a power fail vent
9 = TMS heater*	Control of TMS switchbox
10 = TMS cooling*	Control of cooling water supply of a TMS
13 = Seal gas monitoring	Control via parameters for pumping station and sealing gas

* Only when using pumps with a temperature management system (TMS)

7.3.2 Digital outputs and relays on "*remote*"

➔ Configuration via parameters **[P:019]** and **[P:024]**, respectively **[P:045]**, **[P:046]**, **[P:047]** and **[P:028]**.

- In the description "active" means:
  - For all digital outputs: V+ active high
  - For all relays: Contact switch-over according to configuration of **[P:028]**

Option	Description
0 = Rotation speed switchpoint attained	Active, if switchpoint attained
1 = No error	Active, if failure-free operation
2 = Error	Active, if error message is active
3 = Warning	Active, if warning message is active
4 = Error and / or warning	Active, if error and / or warning is active
5 = Set rotation speed attained	Active, if set rotation speed is attained
6 = Pump on	Active, if Pumping station and Motor is on; No Error
7 = Pump accelerates	Active, if Pumping station is on; Actual rotation speed < Set rotation speed
8 = Pump decelerates	Active, if Pumping station is on; Actual rotation speed > Set rotation speed Pumping station is off; Rotation speed > 3 Hz
9 = always 0	GND for the control of an external device
10 = always 1	+24 V DC for the control of an external device
11 = Remote priority active	Active, if Remote priority is active
12 = Heating	Control is equal to parameter [P:001]
13 = Backing pump	Control is equal to parameter [P:010] and [P:025]
14 = Sealing gas	Control is equal to parameter [P:050]
15 = Pumping station	Control is equal to parameter [P:010]
16 = Pump rotates	Active, if rotation speed > 1 Hz
17 = Pump does not rotate	Active, if rotation speed < 2 Hz
18 = TMS engaged*	Active, if TMS set temperature is engaged
19 = Pressure switchpoint 1 underrun	Control is equal to parameter [P:730] ([P:740] < [P:730])
20 = Pressure switchpoint 2 underrun	Control is equal to parameter [P:732] ([P:750] < [P:732])
21 = Fore-vacuum valve, delayed	+ 24 V DC time delayed after pumping station on
22 = Backing pump standby	Control is equal to standby operation of the backing pump

* Only when using pumps with Temperature Management System TMS

7.3.3 Digital inputs on "*remote*"

➔ Configuration via parameters **[P:062]**, **[P:063]** or **[P:064]**.

Option	Description
0 = deactivated	Connection deactivated
1 = Venting release	Control is equal to parameter [P:012]
2 = Heating	Control is equal to parameter [P:001]
3 = Sealing gas	Control is equal to parameter [P:050]
4 = Run-up time control	Control is equal to parameter [P:004]
5 = Rotation speed setting mode	Control is equal to parameter [P:026]
7 = HV sensor release	Control is equal to parameter [P:041] (only 0 or 1)

7.3.4 Analog output on "*remote*"

➔ Configuration via parameter **[P:055]**.

Option	Description
0 = Rotation speed	Rotation speed signal; 0 - 10 V DC = 0 - 100 % x $f_{Nominal}$
1 = Power	Power signal; 0 - 10 V DC = 0 - 100 % x P_{max}
2 = Current	Current signal; 0 - 10 V DC = 0 - 100 % x I_{max}
3 = always 0 V	Always GND
4 = always 10 V	Output of continously 10 V DC
5 = follows AI1	Follows the analog input 1
6 = Pressure value 1	Pressure value signal; 0 V: error 1 V: underrange 1,5 - 8,5 V for sensor RPT p (hPa) = $10^{(U-5.5\ V)}$ 1,5 - 8,5 V for sensor IKT p (hPa) = $10^{(U-10.5\ V)}$ 9 V: overrange
7 = Pressure value 2	
8 = Control fore-vacuum	Fore-vacuum signal; control of Pfeiffer Vacuum turbo pumping stations

7.3.5 Analog input on "*remote*"

➔ Configuration via parameter **[P:057]**.

Option	Description
0 = Switched off	Connection is deactivated
1 = Set value in rotation speed setting mode	Rotation speed setting mode via pin 7 (0 - 10 V) and pin 11 (GND)

7.3.6 Control via interface

➔ Configuration via parameters **[P:060]** and **[P:061]**.

Option [P:060]	Description
1 = remote	Operation via connection "*remote*"
2 = RS-485	Operation via connection "*RS-485*"
4 = PV.can	For service purposes only
8 = Field bus	Operation via field bus
16 = E74	Operation via connection "*E74*"

Option [P:061]	Description
0 = off	Interface selection via [P:060]
1 = on	Interface selection locked

7.4 Operation with the Pfeiffer Vacuum parameter set

7.4.1 Factory settings

The electronic drive unit is pre-programmed in the factory. This guarantees proper, reliable turbopump operation without the need for additional configuration.

7.4.2 Checking the adjustments

➔ Before operating with parameters, check set values and control commands for their suitability for the pumping process.

➔ Remove the remote plug from electronic drive unit if required.

7.4.3 Gas type dependent operations

Friction causes the rotor to heat up severely under gas load and high rotation speed. To avoid overheating, the electronic drive unit has implemented power-rotation speed-characteristics, whereby the pump can be operated at every rotation speed with the maximum allowable gas load without danger of damage. The maximum power consumption depends on the gas type. Three characteristics are available in order to completely exhaust the pump's capacity for each gas type.

NOTICE

Danger of the pump being destroyed

Pumping of gases with a higher molecular mass in the wrong gas mode can lead to destruction of the pump.

➔ Ensure the gas mode is correctly set.

➔ Contact Pfeiffer Vacuum before using gases with a greater molecular mass (> 80).

- Gas mode "0" for gases with the molecular mass >39, e.g. argon.
- Gas mode "1" for gases with the molecular mass ≤ 39.
- Gas mode "2" for helium.
- Power characteristics according to the technical data of the turbopump.

➔ Check and set-up the gas mode via **[P:027]**.

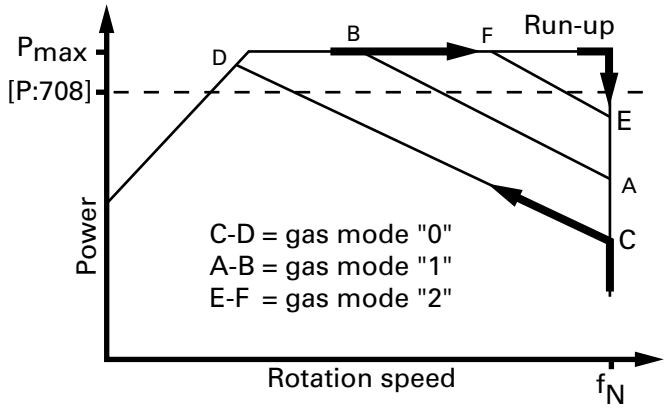

Fig. 5: Principle of power characteristics lines for gas type dependent operations, e.g. gas mode = 0

The turbopump runs up with maximum power consumption. When the nominal and/or set rotation speed is reached, the pump automatically switches over to the chosen power characteristic of the selected gas mode. Increasing gas load is initially compensated by a rise in power consumption in order to keep the rotation speed constant. Increasing gas friction, however, causes the turbopump to heat up more severely. When the gastype-dependent maximum power is exceeded, the rotation speed of the turbopump is reduced until an equilibrium between permissible power and gas friction is attained.

➔ To avoid rotation speed fluctuations, Pfeiffer Vacuum recommends setting a somewhat lower frequency in rotation speed setting mode.

7.4.4 Set value power consumption

➔ Adjust the parameter **[P:708]** to the desired value in %.

If adjusting the set value power consumption below 100 % the run-up time prolongs. To avoid error messages, the parameter **[P:700] RUTimeSVal** should be adjusted accordingly.

7.4.5 Run-up time

The run-up of the turbopump is time-monitored ex factory. There are various causes of prolonged run-up times, e.g.:

- Too high gas loads
- Leakage in the system
- The set value run-up time is too low

➔ Eliminate any external and application-related causes.
➔ Adjust the run-up time via parameter **[P:700]**.

7.4.6 Adjusting the rotation speed switchpoint

The rotation speed switchpoint can be used for the message "Pump operational for the process". Overrunning or underrunning the active rotation speed switchpoint activates or deactivates a signal at the pre-configured output on the electronic drive unit and at the status parameter **[P:302]**.

Rotation speed switchpoint 1

➔ Adjust the parameter **[P:701]** to the desired value in %.
➔ Parameter **[P:017]** = 0

Signal output and status parameter **[P:302]** are based on the set value for rotation speed switchpoint 1 **[P:701]**.

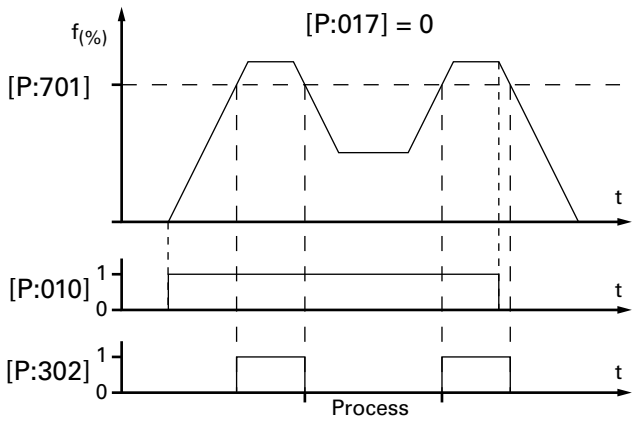

Fig. 6: Example for the configuration rotation speed switchpoint 1 active

Rotation speed switchpoint 1 & 2

➔ Adjust the parameter **[P:701]** to the desired value in %.
➔ Adjust the parameter **[P:719]** to the desired value in %.
➔ Parameter **[P:017]** = 1

When the pumping station **[P:010]** is switched on, the rotation speed switchpoint 1 is the signal generator. When the pumping station is switched off, signal output and status query are based on the rotation speed switchpoint 2. The signal output is governed by the hysteresis between the two switchpoints.

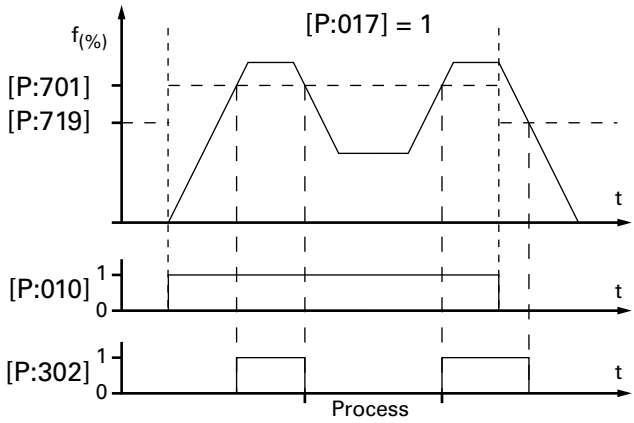

Fig. 7: Example for the configuration rotation speed switchpoint 1+2 active; [P:701] > [P:719]

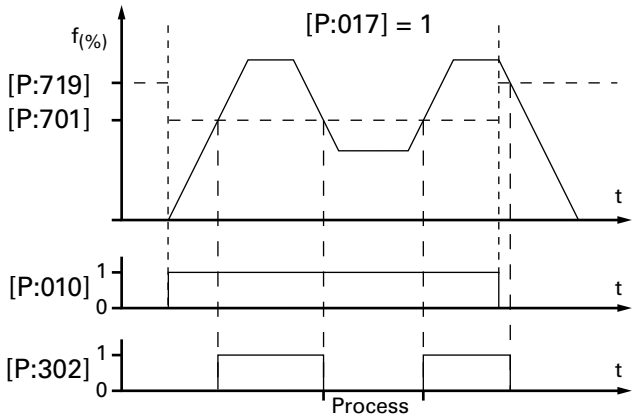

Fig. 8: Example for the configuration rotation speed switchpoints 1+2 active; [P:701] < [P:719]

7.4.7 Rotation speed setting mode

The rotation speed setting mode reduces the rotation speed and hence the throughput of the turbopump. The pumping speed of the turbopump changes proportional to rotation speed. Standby mode is ineffective during rotation speed setting mode. The set rotation speed is adjusted by the set value in rotation speed setting mode **[P:707]**. The rotation speed switchpoint varies with the set rotation speed. Underrunning or overrunning the set value in rotation speed setting mode activates and deactivates the status signal **[P:306] SetSpdAtt** respectively.

➔ Adjust the parameter **[P:707]** to the desired value in %.

➔ Parameter **[P:026]** = 1

➔ Read the parameters **[P:308]/[P:397]**.

Permissible rotation speed range of the turbopump

Adjustments in the rotation speed setting mode or in the standby mode are subject to the permissible rotation speed range of the respective turbopump. Underrunning the minimum permissible value causes the warning message **Wrn100**. The electronic drive unit resets the set rotation speed automatically to the next valid value.

➔ Maintain the permissible rotation speed range of the turbopump (please refer to the technical data in the operating instructions for the respective turbopump).

7.4.8 Standby

Pfeiffer Vacuum recommends standby mode for the turbopump during process and production stops. When standby mode is active, the electronic drive unit reduces the rotation speed of the turbopump. Standby mode is ineffective during rotation speed setting mode. The factory setting for the set value in standby mode is 66.7 % of the nominal rotation speed. Underrunning or overrunning the set speed in standby mode activates or deactivates the status signal **[P:306] SetSpdAtt**.

➔ Adjust the parameter **[P:717]** to the desired value in %.
➔ Parameter **[P:026]** = 0
➔ Parameter **[P:002]** = 1
➔ Read the parameters **[P:308]/[P:397]**.

7.4.9 Rotation speed set value

The typical nominal rotation speed of a turbopump is factory-set in the electronic drive unit. If the electronic drive unit is replaced or a different pump type is used, the reference set value of the nominal rotation speed must be confirmed. This procedure is part of a redundant safety system for avoiding excess rotation speeds.

HiPace	Nominal rotation speed confirmation [P:777]
300	1000 Hz
400 / 700 / 800	820 Hz

➔ Adjust the parameter **[P:777]** according to the pump type.

Once the nominal rotation speed is attained, the pump will run idle unless additional gas loads are entered. Depending on process or application requirements, the nominal rotation speed can be reduced in rotation speed setting mode or standby mode.

7.4.10 Operation mode backing pump

Operation of a connected backing pump via the electronic drive unit depends on the backing pump type.

Operating mode [P:025]	Recommended backing pump
"0" Continuous operation	All backing pumps
"1" Intermittent operation	Diaphragm pumps only
"2" Delayed switching on	All backing pumps
"3" Delayed intermittent operation	Diaphragm pumps only

➔ Adjust the parameter **[P:025]** to the desired value.

Continous operation

With "pumping station on", the electronic drive unit sends a signal to the configured accessory connection to switch on the backing pump. This signal can also be used for controlling a fore-vacuum safety valve.

Intermittend operation (diaphragm pumps only)

Intermittend operation can extend the life expectancy of the membrane of a connected diaphragm pump. Either a diaphragm pump with built-in semiconductor relay or an interconnected relay box with semiconductor relay is required for intermittend operation. The backing pump is switched on and off in dependence of the turbopump's power consumption. A relation to the supplied fore-vacuum pressure is derived from the power consumption. The switching off and switching on thresholds for the backing pump are adjustable. Fluctuations in the power consumption of idling turbopumps and type-dependent varying fore-vacuum pressures of the backing pumps require the switching thresholds to be set separately for the intermittend mode.

Pfeiffer Vacuum recommends the intermittend mode between 5 and 10 hPa. A pressure gauge and a dosing valve are required to set the switching thresholds.

➔ Switch on the vacuum system via the function "pumping station" and await the run-up.

➔ Generate a fore-vacuum pressure of 10 hPa by gas inlet via dosing valve.
➔ Read and note the parameter **[P:316]**.
➔ Adjust the switch on threshold backing pump via parameter **[P:711]** to the determined drive power for a fore-vacuum pressure of 10 hPa.
➔ Reduce the fore-vacuum pressure to 5 hPa.
➔ Read and note the parameter **[P:316]**.
➔ Adjust the switch off threshold backing pump via parameter **[P:710]** to the determined drive power for a fore-vacuum pressure of 5 hPa.

Delayed switching on

Switching on the turbopump and the backing pump at the same time can result in unwanted gas flows. Depending on process or application requirements, the backing pump can be switched on with a delay. The switch-on delay depends on the rotation speed of the turbopump and is fixed in the electronic drive unit at 6 Hz.

The signal can also be used for switching a fore-vacuum safety valve.

Delayed intermittent operation

Fluctuations during intermittent operation can result in the specified switching thresholds being exceeded or not reached, and may cause the backing pump to switch when not required. Depending on the process or application requirements, intermittent operation can be activated with a delay. The switching delay is dependent on the specified switching thresholds being exceeded or not met on an uninterrupted basis over a period of time.

- Switch-off threshold, parameter **[P:710]**
- Switch-on threshold, parameter **[P:711]**
- Delay 8 s.

The signal can also be used for switching a fore-vacuum safety valve.

7.4.11 Standby mode for the backing pump

Connected Pfeiffer Vacuum backing pumps with speed control can be put in standby by configuring a digital output. The pump status signal switches off the backing pump when the turbo pump reaches the specified power consumption level; otherwise, it is operated at reduced speed.

➔ Ensure that a suitable connecting cable from the Pfeiffer Vacuum accessories range is used to connect the backing pump.
➔ Parameters [**P:019]** or **[P:024]** = 22 (standby mode for the backing pump).
➔ Refer to the operating instructions for the backing pump to find out how to set the standby speed.

7.4.12 Operation with accessories

Depending on the configuration, various accessories can be connected to the turbopump and controlled via parameter of the electronic drive unit.

Heating

➔ Switch on or off the heating via parameter **[P:001]**.

The activation of a connected casing heating depends on rotation speed switchpoint 1 (factory setting: 80 % x $f_{Nominal}$).

Fan

Two options in the connection configuration enable continuous or temperature controlled operation of a connected air cooling unit *(see p. 20, chap. 7.3)*. Threshold values are type-specific and are anchored in the electronic drive unit.

Sealing gas valve

➔ Switch on or off a sealing gas valve which is connected to a pre-configured output via parameter **[P:050]**.

Sealing gas monitoring

➔ Configuration of a free and available accessory output [P:035], [P:036, [P:037], or [P:038] for option "13."

➔ Setup of warning threshold **[P:791]** for the required sealing gas flow rate.

➔ Query of sealing gas flow rate via **[P:337]**.

7.4.13 Vent modes

The turbopump can be vented only after the function "pumping station" has been switched off. Signals are sent to configured outputs with a fixed delay of 6 s. There are three options for operation with a venting valve connected.

➔ Enable venting via parameter **[P:012]**.

➔ Select the venting mode via parameter **[P:030]**.

Delayed venting

Start and venting time after "pumping station off" are configurable and depend on the rotation speed of the turbopump.

➔ Parameter **[P:030]** = 0

➔ Adjust the venting rotation speed in % of the nominal rotation speed via parameter **[P:720]**.

➔ Adjust the venting time in s via parameter **[P:721]**.

If the venting rotation speed is underrun, the venting valve will open for the set venting time. In the event of a power failure, venting will occur if the set venting rotation speed is underrun. In this case, the venting period depends on the residual energy delivered by the moving rotor. When power is restored, the venting process is interrupted.

No venting

No venting is performed during this operation mode.

➔ Parameter **[P:030]** = 1

Direct venting

Start and venting time are not configurable. Venting starts with a delay of 6 s after "pumping station off". When the function "pumping station" is switched on renewed, the venting valve closes automatically. In the event of a power failure, venting will occur if an anchored type-specific rotation speed is underrun. When power is restored, the venting process is interrupted.

➔ Parameter **[P:030]** = 2

7.4.14 Monitoring the thermal load

If threshold values are overrun, output signals from temperature sensors allow the pump to be brought to a safe condition. Depending on pump type, temperature threshold values for warnings and error messages are saved fixed in the electronic drive unit . For information purposes, various status queries are prepared in the parameter set.

7.5 Switching on/off the pump

7.5.1 Switching on

The function "pumping station" comprises turbopump operation with control of all connected accessories (e.g. backing pump).

➔ Switch on the supply voltage with switch S1 on the power supply.
➔ Parameter **[P:023]** = 1
➔ Parameter **[P:010]** = 1

Ongoing (and removed) error messages are reset. After a successfully completed self-test, the electronic drive unit sets the turbopump motor and all connected accessories into operation depending on their configuration.

When the pumping station is activated, the motor of the turbopump can be switched off and on via the function **[P:023]**.

7.5.2 Switching off

➔ Parameter **[P:010]** = 0

The electronic drive unit switches off the turbopump and activates preset accessory options (e.g. venting ON, backing pump OFF).

➔ Wait for the complete standstill of the pump.
➔ Cut off the supply voltage with switch S1 on the power supply.

8 Pfeiffer Vacuum Protocol for "RS-485"

8.1 Telegram frame

The telegram frame of the Pfeiffer Vacuum protocol contains only ASCII code characters [32; 127], the exception being the end character of the message C_R. Basically, a master 💻 (e.g. a PC) sends a telegram, which is answered by a slave ○ (e.g. electronic drive unit or gauge).

a2	a1	a0	*	0	n2	n1	n0	l1	l0	dn	...	d0	c2	c1	c0	C_R

a2 - a0	Unit address for slave ○ – Individual address of the unit ["001";"255"] – Group address "9xx" for all identical units (no response) – global address "000" for all units on the bus (no response)
*	Action *(see p. 30, chap. 8.2)*
n2 - n0	Pfeiffer Vacuum parameter numbers
l1 - l0	Data length dn ... d0
dn - d0	Data in data type concerned *(see p. 31, chap. 8.3)*
c2 - c0	Checksum (sum of ASCII values of cells a2 to d0) modulo 256
C_R	carriage return (ASCII 13)

8.2 Telegrams

Data request 💻⇨○?

a2	a1	a0	0	0	n2	n1	n0	0	2	=	?	c2	c1	c0	C_R

Control command 💻⇨○!

a2	a1	a0	1	0	n2	n1	n0	l1	l0	dn	...	d0	c2	c1	c0	C_R

Data response / control command understood ○⇨💻✓

a2	a1	a0	1	0	n2	n1	n0	l1	l0	dn	...	d0	c2	c1	c0	C_R

Error message ○⇨💻×

a2	a1	a0	1	0	n2	n1	n0	0	6	N	O	_	D	E	F	c2	c1	c0	C_R
										_	R	A	N	G	E				
										_	L	O	G	I	C				

NO_DEF	The parameter n2 - n0 does not exist
_RANGE	Data dn - d0 are outside the permitted range
_LOGIC	Logic access violation

8.2.1 Example 1

Data request

Actual rotation speed (parameter **[P:309]**, device address slave: "123")

💻⇨○?	1	2	3	0	0	3	0	9	0	2	=	?	1	1	2	C_R
ASCII	49	50	51	48	48	51	48	57	48	50	61	63	49	49	50	13

Data response: 633 Hz

Actual rotation speed (parameter **[P:309]**, device address slave: "123")

○⇨💻✓	1	2	3	1	0	3	0	9	0	6	0	0	0	6	3	3	0	3	7	C_R
ASCII	49	50	51	49	48	51	48	57	48	54	48	48	48	54	51	51	48	51	55	13

8.2.2 Example 2

Control command

Switch on pumping station (parameter **[P:010]**, device address slave: "042")

💻⇨○!	0	4	2	1	0	0	1	0	0	6	1	1	1	1	1	1	0	2	0	C_R
ASCII	48	52	50	49	48	48	49	48	48	54	49	49	49	49	49	49	48	50	48	13

Control command understood

Switch on pumping station (parameter **[P:010]**, device address slave: "042")

○⇨💻!	0	4	2	1	0	0	1	0	0	6	1	1	1	1	1	1	0	2	0	C_R
ASCII	48	52	50	49	48	48	49	48	48	54	49	49	49	49	49	49	48	50	48	13

8.3 Applied data types

Data type	Description	Size l1 - l0	Example
0 - boolean_old	Boolean value (false / true)	06	000000 / 111111
1 - u_integer	Positive integer number	06	000000 to 999999
2 - u_real	Positive fixed point number	06	001571 equal to 15.71
4 - string	String	06	TC_400
6 - boolean_new	Boolean value (false / true)	01	0 / 1
7 - u_short_int	Positive integer number	03	000 to 999
10 - u_expo_new	Positive exponential number	06	100023
11 - string	String	16	BrezelBier&Wurst

9 Malfunctions

9.1 General

Turbopump and electronic drive unit malfunctions always result in a warning or error message. In both cases, the electronic drive unit outputs an error code. Operating messages are generally displayed via the LEDs on the electronic drive unit. If an error occurs, the turbopump and connected devices will be switched off. The selected venting mode will be triggered after the preset delay.

WARNING

Automatic start-up after power failure or malfunction acknowledgement

The function "pumping station" of the electronic drive unit remains active after power failure or errors that lead to shut down the pump or the system. The turbopump runs up automatically after power ist restored or malfunction acknowledgement.

➔ Switch off the function "pumping station" if necessary.

➔ Provide safety measures against interference in the high vacuum flange while the turbopump is running.

9.2 Operation display via LED

LEDs in the front panel of the electronic drive unit show basic operating conditions of the turbopump. A differentiated malfunction and warning display is possible only for operation with DCU or HPU.

LED	Symbol	LED status	Display	Meaning
Green		Off		currentless
		On, flashing		"Pumping Station OFF", rotation speed ≤ 60 min^{-1}
		On, invers flashing		"Pumping Station ON", set rotation speed not attained
		On, constantly		"Pumping Station ON", set rotation speed attained
		On, blinking		"Pumping Station OFF", rotation speed > 60 min^{-1}
Yellow		Off		no warning
		On, constantly		Warning
Red		Off		no malfunction
		On, constantly		Malfunction

Fig. 9: Behaviour and meaning of LEDs on the electronic drive unit

9.3 Error codes

Error code	Problem	Possible causes	Remedy
Err001	Overspeed		⇨ Call Pfeiffer Vacuum Service ⇨ Only acknowledge for rotational speed f = 0
Err002	Overvoltage	– Incorrect power pack used	⇨ Check power pack type ⇨ Check partial mains voltage
Err006	Run-up fault	– Run-up time threshold set too low – Gas flow in recipient through leaks or open valves – Speed-control switching point not reached upon expiration of run-up time	⇨ Adjust run-up time to process conditions ⇨ Check recipient for leakage and closed valves ⇨ Adjust speed-control switching point
Err007	Insufficient operating materials	– Insufficient operating materials	⇨ Check operating materials ⇨ Only acknowledge for rotational speed f = 0
Err008	Connection from electronic drive unit to pump faulty	– Connection to pump faulty	⇨ Check connections ⇨ Only acknowledge for rotational speed f = 0

Error code	Problem	Possible causes	Remedy
Err010	Internal device error		⇨ Call Pfeiffer Vacuum Service ⇨ Only acknowledge for rotational speed f = 0
Err021	Drive electronics fail to identify pump		⇨ Call Pfeiffer Vacuum Service ⇨ Only acknowledge for rotational speed f = 0
Err043	Internal configuration error		⇨ Call Pfeiffer Vacuum Service
Err044	Excess temperature electronics	– Insufficient cooling	⇨ Improve cooling ⇨ Check deployment conditions
Err045	Motor overheated	– Insufficient cooling	⇨ Improve cooling ⇨ Check deployment conditions
Err046	Internal initialization error		⇨ Call Pfeiffer Vacuum Service
Err091	Internal device error		⇨ Call Pfeiffer Vacuum Service
Err092	Unknown terminal panel		⇨ Call Pfeiffer Vacuum Service
Err093	Temperature evaluation on motor is faulty		⇨ Call Pfeiffer Vacuum Service
Err094	Temperature evaluation on electronics is faulty		⇨ Call Pfeiffer Vacuum Service
Err098	Internal communication error		⇨ Call Pfeiffer Vacuum Service
Err107	Combined error for output stage		⇨ Call Pfeiffer Vacuum Service ⇨ Only acknowledge for rotational speed f = 0
Err108	Speed measurement fault		⇨ Call Pfeiffer Vacuum Service ⇨ Only acknowledge for rotational speed f = 0
Err109	Software not released		⇨ Call Pfeiffer Vacuum Service
Err110	Operating material analysis contains errors		⇨ Call Pfeiffer Vacuum Service ⇨ Only acknowledge for rotational speed f = 0
Err111	Operating materials pump communication error		⇨ Call Pfeiffer Vacuum Service ⇨ Only acknowledge for rotational speed f = 0
Err112	Operating materials pump collective fault		⇨ Call Pfeiffer Vacuum Service ⇨ Only acknowledge for rotational speed f = 0
Err114	Temperature evaluation on output stage is faulty		⇨ Call Pfeiffer Vacuum Service
Err117	Excess temperature on pump base	– Insufficient cooling	⇨ Improve cooling ⇨ Check deployment conditions
Err118	Excess temperature on output stage	– Insufficient cooling	⇨ Improve cooling ⇨ Check deployment conditions
Err119	Excess temperature on bearings	– Insufficient cooling	⇨ Improve cooling ⇨ Check deployment conditions
Err143	Operating materials pump overtemperature	– Insufficient cooling	⇨ Improve cooling ⇨ Check deployment conditions ⇨ Only acknowledge for rotational speed f = 0
Err777	Nominal speed not confirmed	– Nominal speed not confirmed after replacing drive electronics	⇨ Confirm nominal speed with **[P:777]** ⇨ Only acknowledge for rotational speed f = 0
Wrn001	TMS warm-up time elapsed	– Internal timer for warm-up monitoring elapsed	⇨ Check deployment conditions
Wrn003	TMS heating circuit temperature sensor	– TMS temperature not in the permissible range between +5 °C and 85 °C	⇨ Check deployment conditions ⇨ Call Pfeiffer Vacuum Service
Wrn007	Undervoltage/mains failure	– Mains failure	⇨ Check power supply
Wrn018	Authorization level conflict	– Pumping station switched on with **[P:010]**, while E74 input "start/stop" is off (open)	⇨ Switch on pumping station E74 ⇨ **[P:010]**switch off
Wrn021	Sealing gas signal invalid	– Sealing gas monitoring unit signal outside the valid range	⇨ Check connections for sealing gas monitoring ⇨ Check parameter options for accessory outputs
Wrn034	Low sealing gas flow	– Sealing gas monitoring unit signal valid, but below the set threshold **[P:791]**	⇨ Check and improve sealing gas supply ⇨ Check deployment conditions
Wrn045	High motor temperature	– Insufficient cooling	⇨ Improve cooling ⇨ Check deployment conditions
Wrn076	High electronics temperature	– Insufficient cooling	⇨ Improve cooling ⇨ Check deployment conditions
Wrn097	Invalid pump information	– Pump data error	⇨ Factory setting through acknowledgement
Wrn098	Insufficient pump information	– Connection to pump faulty	⇨ Call Pfeiffer Vacuum Service
Wrn100	Speed increased to minimum value	– Permitted specifications for speed set-up mode or standby not correct	⇨ Check **[P:707]** or **[P:717]** ⇨ Refer to technical data for the turbopump for valid speed range
Wrn115	Temperature evaluation on pump base is faulty		⇨ Call Pfeiffer Vacuum Service

Error code	Problem	Possible causes	Remedy
Wrn116	Temperature evaluation on bearings is faulty		⇨ Call Pfeiffer Vacuum Service
Wrn117	High pump base temperature	– Insufficient cooling	⇨ Improve cooling ⇨ Check deployment conditions
Wrn118	High output stage temperature	– Insufficient cooling	⇨ Improve cooling ⇨ Check deployment conditions
Wrn119	High bearing temperature	– Insufficient cooling	⇨ Improve cooling ⇨ Check deployment conditions
Wrn143	High temperature of operating materials pump	– Insufficient cooling	⇨ Improve cooling ⇨ Check deployment conditions
Wrn168	High delay	– Pressure increase speed too high; venting rate to high	⇨ Check and adjust venting rate on pump-specific basis

9.3.1 Operation with DCU

In addition to device-specific warning and error messages pertaining to the electronic drive unit, a connected display and control unit may also issue its own messages.

Display DCU	Problem	Possible causes	Remedy
* Warning F110 *	Pressure measuring device	– Gauge faulty – Connection to gauge detached during operation	⇨ Restart with gauge connected ⇨ Change pressure gauge ⇨ Install pressure gauge correctly
** Error E040 **	Hardware error	– external RAM faulty	⇨ Contact Pfeiffer Vacuum Service.
** Error E042 **	Hardware error	– EPROM check total	⇨ Contact Pfeiffer Vacuum Service.
** Error E043 **	Hardware error	– E^2PROM write error	⇨ Contact Pfeiffer Vacuum Service.
** Error E090 **	Internal device error	– RAM not large enough – DCU is connected to incorrect pump electronics	⇨ Contact Pfeiffer Vacuum Service. ⇨ Connect correct pump electronics
** Error E698 **	Communication error	– The electronic drive unit does not respond	⇨ Contact Pfeiffer Vacuum Service.

Declaration of conformity

We hereby declare that the product cited below satisfies all relevant provisions according to the following **EC directives**:

- **Electromagnetic Compatibility 2014/30/EU**
- **Low Voltage 2014/35/EU**
- **Restriction of the use of certain Hazardous Substances 2011/65/EU**

TC 400

Harmonised standards and national standards and specifications which have been applied:

DIN EN 61000-3-2 : 2014
DIN EN 61000-3-3 : 2013
DIN EN 61010-1 : 2010
DIN EN 61326-1 : 2013
DIN EN 62061 : 2013
Semi F47-0200
Semi S2-0706

Signature:

Pfeiffer Vacuum GmbH
Berliner Straße 43
35614 Asslar
Germany

(Dr. Ulrich von Hülsen)
Managing Director

Asslar, 2017-10-10

PFEIFFER VACUUM

VACUUM SOLUTIONS FROM A SINGLE SOURCE

Pfeiffer Vacuum stands for innovative and custom vacuum solutions worldwide, technological perfection, competent advice and reliable service.

COMPLETE RANGE OF PRODUCTS

From a single component to complex systems:
We are the only supplier of vacuum technology that provides a complete product portfolio.

COMPETENCE IN THEORY AND PRACTICE

Benefit from our know-how and our portfolio of training opportunities!
We support you with your plant layout and provide first-class on-site service worldwide.

Are you looking for a perfect vacuum solution? Please contact us:

Pfeiffer Vacuum GmbH
Headquarters • Germany
T +49 6441 802-0
info@pfeiffer-vacuum.de

www.pfeiffer-vacuum.com

PFEIFFER VACUUM