Smart choice for power

xantrex

XKW 8-125
XKW 20-50
XKW 33-33
XKW 40-25
XKW 60-18
XKW 80-13
XKW 150-7
XKW 300-3.5
XKW 600-1.7

Operating Manual

XKW 1000 Watt Series Programmable DC Power Supply

www.xantrex.com

xantrex™

Operating Manual for

XKW 1000 Watt Series
Programmable DC
Power Supply

Limited Warranty

What does this warranty cover and how long does it last?

This Limited Warranty is provided by Xantrex Technology, Inc. ("Xantrex") and covers defects in workmanship and materials in your **XKW 1000 Watt Series DC Power Supply.** This warranty lasts for a Warranty Period of **5 years** from the date of purchase at point of sale to you, the original end user customer.

What will Xantrex do?

Xantrex will, at its option, repair or replace the defective product free of charge, provided that you notify Xantrex of the product defect within the Warranty Period, and provided that Xantrex through inspection establishes the existence of such a defect and that it is covered by this Limited Warranty.

Xantrex will, at its option, use new and/or reconditioned parts in performing warranty repair and building replacement products. Xantrex reserves the right to use parts or products of original or improved design in the repair or replacement. If Xantrex repairs or replaces a product, its warranty continues for the remaining portion of the original Warranty Period or 90 days from the date of the return shipment to the customer, whichever is greater. All replaced products and all parts removed from repaired products become the property of Xantrex.

Xantrex covers both parts and labor necessary to repair the product, and return shipment to the customer via a Xantrex-selected non-expedited surface freight within the contiguous United States and Canada. Alaska and Hawaii are excluded. Contact Xantrex Customer Service for details on freight policy for return shipments outside of the contiguous United States and Canada.

How do you get service?

If your product requires troubleshooting or warranty service, contact your merchant. If you are unable to contact your merchant, or the merchant is unable to provide service, contact Xantrex directly at:

Phone:	604 422 8595
Toll Free North America:	1 800 667 8422
Fax:	604 421 3056
Email:	info@xantrex.com

Direct returns may be performed according to the Xantrex Return Material Authorization Policy described in your product manual. For some products, Xantrex maintains a network of regional Authorized Service Centers. Call Xantrex or check our website to see if your product can be repaired at one of these facilities.

In any warranty claim, dated proof of purchase must accompany the product and the product must not have been disassembled or modified without prior written authorization by Xantrex.

Proof of purchase may be in any one of the following forms:

- The dated purchase receipt from the original purchase of the product at point of sale to the end user, or
- The dated dealer invoice or purchase receipt showing original equipment manufacturer (OEM) status, or
- The dated invoice or purchase receipt showing the product exchanged under warranty

What does this warranty not cover?

This Limited Warranty does not cover normal wear and tear of the product or costs related to the removal, installation, or troubleshooting of the customer's electrical systems. This warranty does not apply to and Xantrex will not be responsible for any defect in or damage to:

a. the product if it has been misused, neglected, improperly installed, physically damaged or altered, either internally or externally, or damaged from improper use or use in an unsuitable environment;

b. the product if it has been subjected to fire, water, generalized corrosion, biological infestations, and high input voltage from lightning strikes;

c. the product if repairs have been done to it other than by Xantrex or its authorized service centers (hereafter "ASCs");

d. the product if it is used as a component part of a product expressly warranted by another manufacturer;

e. the product if its original identification (trade-mark, serial number) markings have been defaced, altered, or removed.

Disclaimer

Product

THIS LIMITED WARRANTY IS THE SOLE AND EXCLUSIVE WARRANTY PROVIDED BY XANTREX IN CONNECTION WITH YOUR XANTREX PRODUCT AND IS, WHERE PERMITTED BY LAW, IN LIEU OF ALL OTHER WARRANTIES, CONDITIONS, GUARANTEES, REPRESENTATIONS, OBLIGATIONS AND LIABILITIES, EXPRESS OR IMPLIED, STATUTORY OR OTHERWISE IN CONNECTION WITH THE PRODUCT, HOWEVER ARISING (WHETHER BY CONTRACT, TORT, NEGLIGENCE, PRINCIPLES OF MANUFACTURER'S LIABILITY, OPERATION OF LAW, CONDUCT, STATEMENT OR OTHERWISE), INCLUDING WITHOUT RESTRICTION ANY IMPLIED WARRANTY OR CONDITION OF QUALITY, MERCHANTABILITY OR FITNESS FOR A PARTICULAR PURPOSE. ANY IMPLIED WARRANTY OF MERCHANTABILITY OR FITNESS FOR A PARTICULAR PURPOSE TO THE EXTENT REQUIRED UNDER APPLICABLE LAW TO APPLY TO THE PRODUCT SHALL BE LIMITED IN DURATION TO THE PERIOD STIPULATED UNDER THIS LIMITED WARRANTY.

IN NO EVENT WILL XANTREX BE LIABLE FOR ANY SPECIAL, DIRECT, INDIRECT, INCIDENTAL OR CONSEQUENTIAL DAMAGES, LOSSES, COSTS OR EXPENSES HOWEVER ARISING WHETHER IN CONTRACT OR TORT INCLUDING WITHOUT RESTRICTION ANY ECONOMIC LOSSES OF ANY KIND, ANY LOSS OR DAMAGE TO PROPERTY, ANY PERSONAL INJURY, ANY DAMAGE OR INJURY ARISING FROM OR AS A RESULT OF MISUSE OR ABUSE, OR THE INCORRECT INSTALLATION, INTEGRATION OR OPERATION OF THE PRODUCT.

Exclusions

If this product is a consumer product, federal law does not allow an exclusion of implied warranties. To the extent you are entitled to implied warranties under federal law, to the extent permitted by applicable law they are limited to the duration of this Limited Warranty. Some states and provinces do not allow limitations or exclusions on implied warranties or on the duration of an implied warranty or on the limitation or exclusion of incidental or consequential damages, so the above limitation(s) or exclusion(s) may not apply to you. This Limited Warranty gives you specific legal rights. You may have other rights which may vary from state to state or province to province.

Information

WITHOUT LIMITING THE GENERALITY OF THE FOREGOING, UNLESS SPECIFICALLY AGREED TO BY IT IN WRITING, XANTREX

a. MAKES NO WARRANTY AS TO THE ACCURACY, SUFFICIENCY OR SUITABILITY OF ANY TECHNICAL OR OTHER INFORMATION PROVIDED IN MANUALS OR OTHER DOCUMENTATION PROVIDED BY IT IN CONNECTION WITH THE PRODUCT; AND

b. ASSUMES NO RESPONSIBILITY OR LIABILITY FOR LOSSES, DAMAGES, COSTS OR EXPENSES, WHETHER SPECIAL, DIRECT, INDIRECT, CONSEQUENTIAL OR INCIDENTAL, WHICH MIGHT ARISE OUT OF THE USE OF SUCH INFORMATION.

THE USE OF ANY SUCH INFORMATION WILL BE ENTIRELY AT THE USER'S RISK.

WARNING: Limitations on Use

Please refer to your product user manual for limitations on uses of the product. Specifically, please note that this power supply is not intended for use in connection with life support systems and Xantrex makes no warranty or representation in connection with any use of the product for such purposes.

Xantrex Technology, Inc.
8999 Nelson Way
Burnaby, British Columbia
Canada V5A 4B5

Information About Your Power Supply

Please record the following information when you first open your Power Supply package:

Model Number _____

Serial Number _____

Purchased From _____

Purchase Date _____

Release

Release 2.2 (2003-04)

Copyright © 2002 Xantrex Technology Inc. All rights reserved.

Printed in Canada

Warnings and Cautions

Warnings and cautions are defined and formatted in this manual as shown below.

WARNING
Describes a potential hazard which could result in injury or death, or, a procedure which, if not performed correctly, could result in injury or death.

CAUTION
Describes a procedure which, if not performed correctly, could result in damage to data, equipment, or systems.

Power Supply Safety

WARNING—High Energy and High Voltage
Exercise caution when using and calibrating a power supply. High energy levels can be stored at the output voltage terminals on a power supply in normal operation. In addition, potentially lethal voltages exist in the power circuit and on the output and sense connectors of a power supply with a rated output greater than 40 V. Filter capacitors store potentially dangerous energy for some time after power is removed.

CAUTION
Operate the power supply in an environment free of flammable gases or fumes. To ensure that the power supply's safety features are not compromised, use the power supply as specified in this manual and do not substitute parts or make any unauthorized modifications. Contact the service technician for service and repair help. Repairs must be made by experienced service technicians only.

CAUTION
For Use as a Battery Charger
When you are using any of these power supplies for battery charging applications, it is essential to provide an appropriately sized fuse or circuit breaker in series between the power supply output and the battery.
Installation of a protector (fuse or DC circuit breaker) rated for about 115% of the maximum current rating of the power supply and designed specifically to interrupt the DC voltage of the battery, will provide adequate reverse polarity current protection. Where several power supplies are in parallel, it is best to fuse each one, rather than one large fuse for all.

About This Manual

This Operating Manual contains user information for the XKW Series of variable DC output power supplies, available in several voltage models at 1000 Watts. It provides information about features and specifications, installation procedures, and basic functions testing, as well as operating procedures for using both front panel control and remote analog programming functions.

Who Should Use This Manual

This manual is designed for the user who is familiar with basic electrical laws especially as they apply to the operation of power supplies. This implies a recognition of Constant Voltage and Constant Current operating modes and the control of input and output power, as well as the observance of safe techniques while making supply or pin connections and any changes in switch settings.

Main Sections

Section 1 Features and Specifications Describes the power supply and lists its features and specifications.

Section 2 Installation Goes through basic setup procedures. Describes inspection, cleaning, shipping, and storage procedures. Includes AC input connection, basic functions testing, and load and sense lines connections.

Section 3 Operation Provides procedures for local (front panel) operation. Includes procedures for using over voltage protection, shutdown function, multiple supplies, and over temperature protection.

Section 4 Calibration Includes calibration for programming and readback accuracy.

Manual Revisions

The current release of this manual is listed below. Updates may be issued as an addendum.

Release 2.2 (2003-04)

Power Supply Safety Markings

~	Alternating Current	○	Off (Supply)
⏚	Earth (Ground) Terminal	♨	Caution (Hot Surface)
⏚	Protective Conductor Terminal	⚠	Caution (Check manual for additional information.)
|	On (Supply)		

Contents

About This Manual . . . vii

Section 1. Features and Specifications

Description . . . 11
Features and Options . . . 12
Front Panel Controls . . . 12
Rear Panel Connectors and Switch . . . 14
Controls, Connectors, and Indicators . . . 14
Specifications . . . 17
- Electrical Specifications . . . 17
- Additional Specifications . . . 19
- Input Conditions . . . 19
- Additional Features . . . 19
- Remote Programming and Monitoring . . . 20
- Environmental Specification . . . 20
- Mechanical Specifications . . . 21

Section 2. Installation

Introduction . . . 23
Basic Setup Procedure . . . 23
Inspection, Cleaning, and Packaging . . . 24
- Initial Inspection . . . 24
- Periodic Cleaning . . . 24

Returning Power Supplies to the Manufacturer . . . 25
- Return Material Authorization Policy . . . 25
- Packaging for Shipping or Storage . . . 26

Location, Mounting and Ventilation . . . 27
- Ventilation Requirements . . . 27
- Rack Mounting . . . 27

AC Input Power . . . 28
- AC Input Voltage Selection . . . 28
- Input Line Impedance . . . 29

Functional Tests . . . 30
- Voltage Mode Operation . . . 30
- Current Mode Operation . . . 31

Load Connection . . . 32
- Load Conductor Ratings . . . 32
- Load Connection and Grounding . . . 32
- Output Cord Strain Relief . . . 33

Local and Remote Sensing . . . 35

Section 3. Operation

Single Supply Operation (Local Mode) . . . 37
- Setup . . . 37
- Voltage Mode Operation . . . 37
- Current Mode Operation . . . 37

Multiple Supplies 38
Series Operation 38
Parallel Operation 39
Split Supply Operation. 39
Over Voltage Protection (OVP) 40
Front Panel OVP Operation 40
Remote Programming of OVP With External Voltage Sources. 41
Remote Programming of OVP with an External Resistance 43
Remote Programming of OVP with External Current Sources 44
Remote OVP Sensing 45
Remote ON/OFF 46
Remote ON/OFF by Contact Closure 46
Remote Programming of Output Voltage and Current Limit 47
Remote Programming Switch SW1. 47
Programming With External Voltage Sources 48
Programming With an External Resistance. 50
Programming With an External Current Source 51
Remote Monitoring and Status Indicators 52
Using Over Temperature Protection (OTP) 53
Resetting the OTP circuit 53

Section 4. Calibration

Introduction 55
Calibration Setup 55
Service Environment and Precautions 55
Calibrating 56

Section 1. Features and Specifications

Description

This series of power supplies provides highly stable, variable DC output voltage and current at 1000 Watts of output power. You can select from several remote control choices: standard analog programming, optional isolated programming or readback, and optional GPIB programming or RS-232 control. It is designed for a broad range of development, system and burn-in applications and uses high frequency switching regulator technology to achieve high power density in a small package size. See Table 1.1. for the list of available models.

Table 1.1 Available Voltage and Current Ranges

Model	Voltage Range	Current Range
8-125	0-8 V	0-125 A
20-50	0-20 V	0-50 A
33-33	0-33 V	0-33 A
40-25	0-40 V	0-25 A
60-18	0-60 V	0-18 A
80-13	0-80 V	0-13 A
150-7	0-150 V	0-7 A
300-3.5	0-300 V	0-3.5 A
600-1.7	0-600 V	0-1.7 A

Features and Options

- Simultaneous digital display of both voltage and current.
- Ten-turn front panel voltage and current controls for high resolution setting of the output voltage and current from zero to the rated output.
- Automatic mode crossover into current or voltage mode.
- 115/230 Vac selectable input voltage, 47–63 Hz single phase.
- High frequency switching technology allows high power density, providing increased power output in a small, light package.
- Multiple units can be connected in parallel or in series to provide increased current or voltage and operated in master/slave mode.
- Remote sensing to compensate for losses in power leads up to 1 V per lead (0.5 V for 8 V model).
- Adjustable Over Temperature Protection (OTP).
- External TTL, AC, or DC shutdown.
- Remote voltage, current limit and over voltage protection (OVP) programming with selectable programming ranges.
- External indicator signals for remote monitoring of OVP status, local/remote programming status, thermal shutdown and output voltage and current.
- Isolated analog remote programming control of the output voltage or current with the optional ISOL Interface.
- Optional internal GPIB control for remote digital programming and readback from a computer.

Front Panel Controls

See Figure 1.1 to review the controls, LEDs, and meters located on the power supply's front panel. Check the following sections for additional descriptions of front panel controls and functions.

- "Mechanical Specifications" on page 21
- "Functional Tests" on page 30
- Section 3, "Operation"

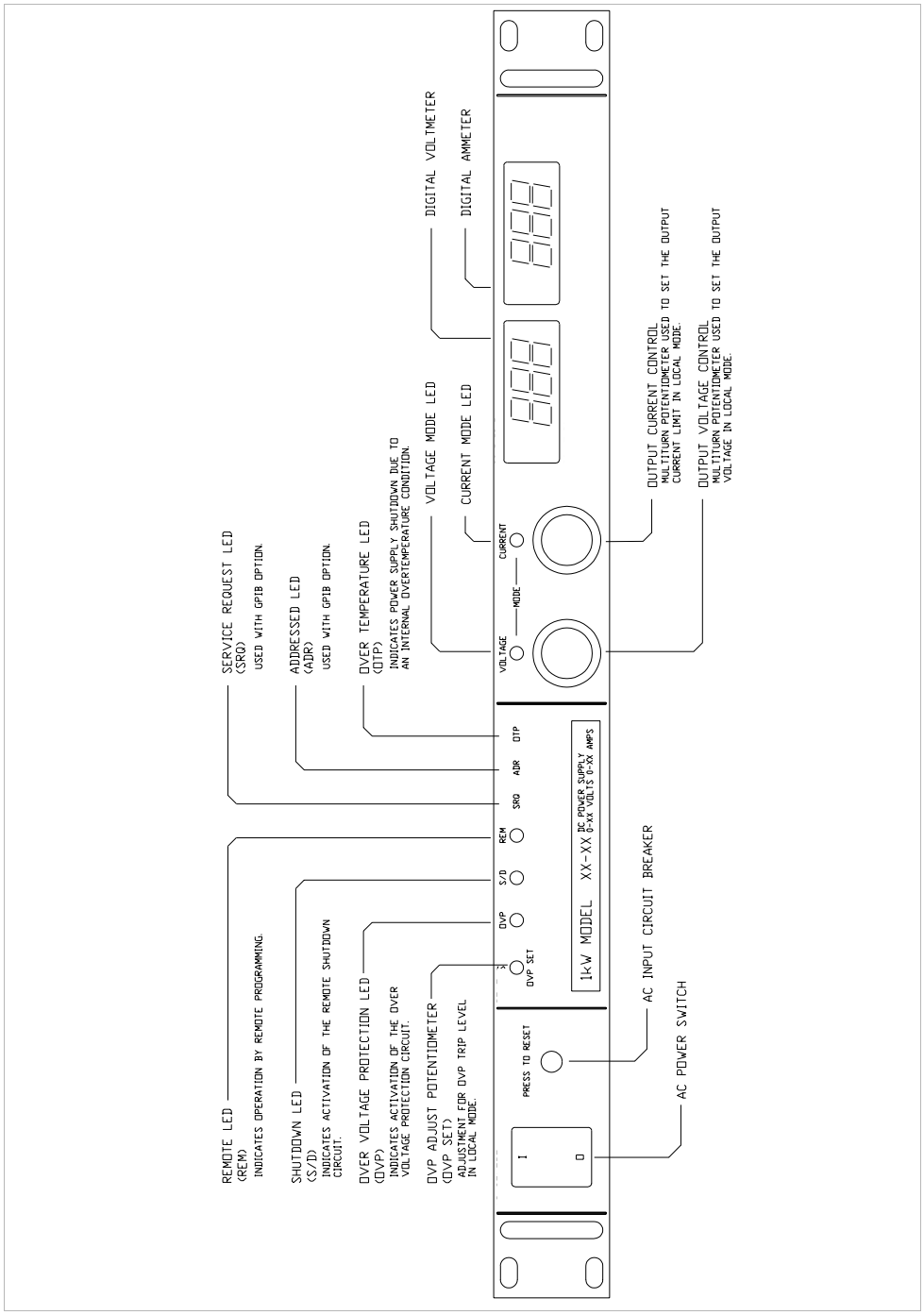

Figure 1.1 Power Supply Front Panel

Rear Panel Connectors and Switch

The input AC power, output DC power, as well as the remote program sense and monitor connector are located on the rear panel. The program and monitor function selector switch (SW1) is located internally on the main PCB. See Figure 1.2, on page 15 for locations. Refer to Section 2, “Installation” for detail on procedures for connections and settings.

Controls, Connectors, and Indicators

CAUTION
All remote programming input and monitoring lines are internally referenced to the supply’s negative output. Do not reference remote programming or monitor lines to the supply’s positive output. J3 pin 6 (ground) is directly connected to the supply’s negative output. Do not connect this pin to the positive output or to the chassis.

Please refer to Figure 1.1, “Power Supply Front Panel” on page 13 for front panel controls and indicators, Figure 1.2, “Power Supply Rear Panel” on page 15 for rear panel connectors and switch details, and to Figure 1.3, “J3 Program, Sense, and Monitor Connector Description” on page 16 for a description of the J3 Program, Sense, and Monitor Connector.

Note: J3 pins 1, 2, and 14 form an isolated control function and may be biased relative to the supply output

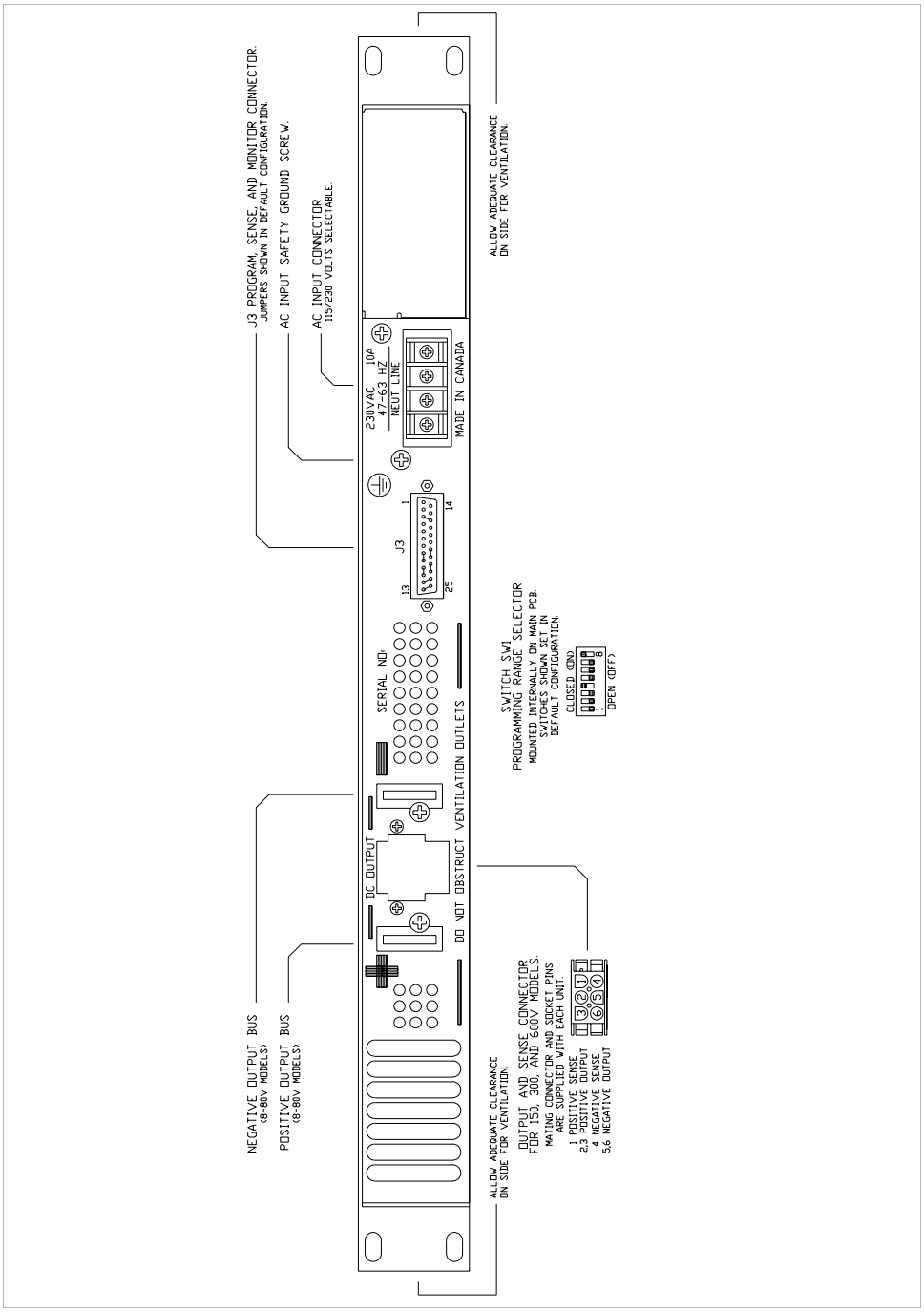

Figure 1.2 Power Supply Rear Panel

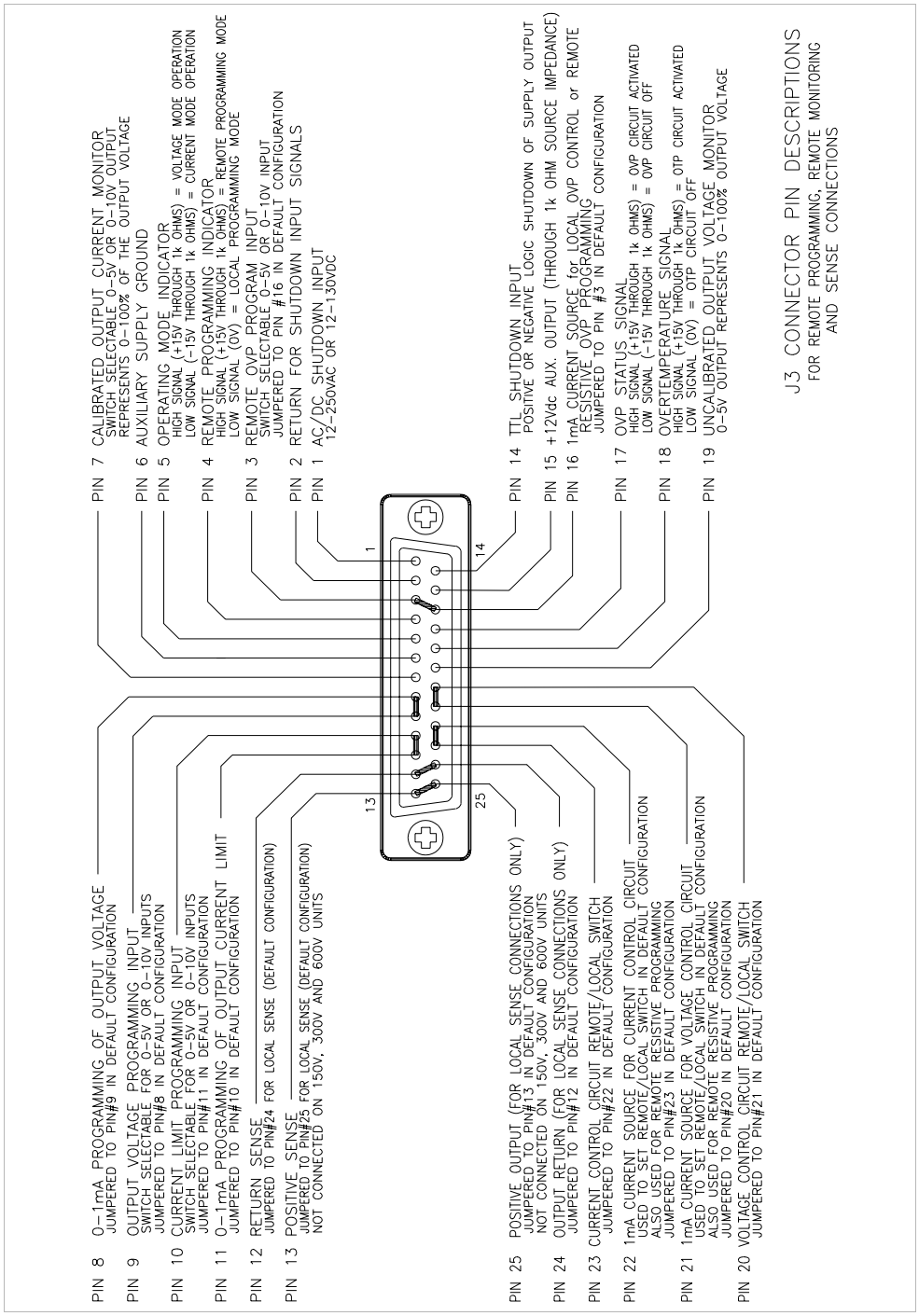

Figure 1.3 J3 Program, Sense, and Monitor Connector Description

Specifications

Electrical Specifications

These specifications are warranted over a temperature range of 0 °C to 50 °C.

Specifications are subject to change without notice.

Table 1.2 Electrical Specifications for 8 V to 60 V Models

Models	8-125	20-50	33-33	40-25	60-18
Output Ratings:					
Output Voltage	0-8 V	0-20 V	0-33 V	0-40 V	0-60 V
Output Current	0-125 A	0-50 A	0-33 A	0-25 A	0-18 A
Output Power	1000 W	1000 W	1089 W	1000 W	1080 W
Line Regulation: [1]					
Voltage	8 mV	20 mV	33 mV	40 mV	60 mV
Current	125 mA	50 mA	33 mA	25 mA	18 mA
Load Regulation: [2]					
Voltage	8 mV	20 mV	33 mV	40 mV	60 mV
Current	125 mA	50 mA	33 mA	25 mA	18 mA
Meter Accuracy:					
Voltage	0.09 V	0.3 V	0.43 V	0.5 V	0.7 V
Current	1.35 A	0.6 A	0.43 A	0.35 A	0.28 A
OVP Adjustment Range:	0.4-8.8 V	1.0-22 V	1.65-36.3 V	2-44 V	3-66 V
Output Noise and Ripple: (20 Hz - 20 MHz)					
Voltage (p-p)	50 mV	50 mV	100 mV	100 mV	150 mV
Voltage (rms)	10 mV	10 mV	10 mV	10 mV	20 mV
Drift:[3]					
Voltage	4 mV	10 mV	16.5 mV	20 mV	30 mV
Current	62.5 mA	25 mA	16.5 mA	12.5 mA	9 mA
Temperature Coefficient: [4]					
Voltage	1.6 mV	4 mV	6.6 mV	8 mV	12 mV
Current	37.5 mA	15 mA	9.9 mA	7.5 mA	5.4 mA
Nominal Output Capacitance:	66,000µF	30,000µF	10,000µF	10,000µF	10,000µF
Nominal Capacitance (Output to Chassis):	200nF	270nF	300nF	250nF	250nF

1. For input voltage variation over the AC input voltage range, with constant rated load.
2. For 0-100% load variation, with constant nominal line voltage.
3. Maximum drift over 8 hours with constant line, load and temperature, after 90 minute warm-up.
4. Change in output per °C change in ambient temperature, with constant line and load.

Table 1.3 Electrical Specifications for 80 V to 600 V Models

Models	80-13	150-7	300-3.5	600-1.7
Output Ratings:				
Output Voltage	0-80 V	0-150 V	0-300 V	0-600 V
Output Current	0-125 A	0-7 A	0-3.5 A	0-1.7 A
Output Power	1040 W	1050 W	1050 W	1020 W
Line Regulation: [1]				
Voltage	80 mV	150 mV	300 mV	600 mV
Current	13 mA	7 mA	3.5 mA	1.7 mA
Load Regulation: [2]				
Voltage	80 mV	150 mV	300 mV	600 mV
Current	13 mA	7 mA	3.5 mA	1.7 mA
Meter Accuracy:				
Voltage	0.9 V	1.6 V	4.0 V	7.0 V
Current	0.23 A	0.08 A	0.045 A	0.018 A
OVP Adjustment Range:	4-88 V	7.5-165 V	15-330 V	30-660 V
Output Noise and Ripple: (20 Hz - 20 MHz)				
Voltage (p-p)	150 mV	200 mV	200 mV	500 mV
Voltage (rms)	20 mV	30 mV	40 mV	100 mV
Drift:[3]				
Voltage	40 mV	75 mV	150 mV	300 mV
Current	6.5 mA	3.5 mA	1.75 mA	0.85 mA
Temperature Coefficient: [4]				
Voltage	16 mV	30 mV	60 mV	120 mV
Current	3.9 mA	2.1 mA	1.05 mA	0.51 mA
Nominal Output Capacitance:	3,000µF	440µF	440µF	4.7µF
Nominal Capacitance (Output to Chassis):	250nF	250nF	270nF	220nF

1. For input voltage variation over the AC input voltage range, with constant rated load.
2. For 0-100% load variation, with constant nominal line voltage.
3. Maximum drift over 8 hours with constant line, load and temperature, after 90 minute warm-up.
4. Change in output per °C change in ambient temperature, with constant line and load.

Additional Specifications

Rise Time (No Load, Full Load): [1]	300 ms (full load and no load)
Fall Time (No Load): [1]	5 s
Fall Time (Full Load): [1]	200 ms
Voltage Mode Transient Response:[2]	1 ms
Time Delay from power on until output stable	2 s maximum

1. Measured with stepped 0-10 V analog programming source and a resistive load.
2. Time for the output voltage to recover within 1% band for 30% step load change from 70% to 100% or 100% to 70%.

Input Conditions

Rated AC Input Voltage with Maximum Input Current	200-250 Vac at 10 Arms or 100-130 Vac at 20 Arms
Maximum AC Input Power	1300 W at full load
Operational AC Input Voltage	200-250 Vac or 100-130 Vac
Input Frequency Range	47-63 Hz
Power Factor	approx. 0.7 at full load

Additional Features

Switching Frequency	Nominal 100 kHz, 200 kHz output ripple >80 V models: 80 kHz, 160 kHz output ripple
Output Hold-up Time	15 ms at full load, nominal line
Maximum Voltage Differential from either output to safety ground	±600 Vdc
Insulation Resistance	Input to chassis: >30 MΩ, with 500 Vdc;[1] Output to chassis: >20 MΩ, with 1000 Vdc.
Isolation Voltage	Input to output: 1350 Vac

1. To protect from power surges, the units have a 420 Vac varistor built in to act as an over-voltage clamp. The above insulation resistance specification is subject to be measured with the varistors taken out of the circuit

Remote Programming and Monitoring

Remote Start/Stop and Interlock	TTL compatible input. Contact Closure, 12-250 Vac or 12-130 Vdc
Remote Monitoring	0-5 V[1]
Remote Programming and Monitoring Accuracy	Programming better than 5% Monitoring voltage 10% Current 5%
Maximum Remote Sense Line Drop Compensation	1 V[2]

1. The 0-5 V voltage monitor signal is uncalibrated while the 0-5 V current monitor is calibrated, 0 = 0% output, 5 V = 100% output.
2. 0.5 V on 8-125 model.

Environmental Specification

Operating Temperature Range	0-50 °C
Storage Temperature Range	-55 °C to +85 °C
Humidity Range	Up to 80% non-condensing
Operating Altitude	Derate maximum operating temperature by 1°C per 1,000 feet (300 m) for operation between 5,000 feet and (1,500 m) and 15,000 feet (4,500 m)
Storage Altitude	Up to 50,000 feet (15,000 m)
Installation Category	II
Pollution Degree	2

Mechanical Specifications

Front Panel V and I Control	10-turn voltage and current potentiometers
Front Panel Voltage Control Resolution	0.02% of V max
Front Panel Voltage and Current Meters	3 or 4 digit LED readouts for each. See Table 1.2 and Table 1.3 for accuracy.
AC Input Connector Type	2 screw (#6) terminal block
Output Connector	Low voltage: busbars; High voltage: 6 pin AMP connector
Sense Connector	Low voltage: Part of J3 (DB25) on rear panel High voltage: Output connector
Analog Programming Connector	Part of J3 (DB25) on rear panel
Chassis Ground	1 chassis ground screw on rear panel
Cooling	Fan cooled. Air exhausts to rear. Over temperature shutdown: automatic restart.
Mounting	Integral rack mount ears on front panel
Dimensions	1.71 in. (41.635 mm) H x 19 in. (482.6 mm) W x 17.475 in. (443.865 mm) D
Weight	Approximately 18 lb. (8.2 kg)
Approvals	CSA Certified to CSA Bulletin 556B FCC Part 15B and Industry Canada Class A CE Marked for Low Voltage Directive and EMC Directive (Class A emissions)

Section 2. Installation

Introduction

This section provides recommendations and procedures for inspecting, installing, and testing the power supply.

Basic Setup Procedure

See Table 2.1 for a summary of the basic setup procedure and an overall view of the subsections in Section 2. Use the procedure as a quick reference if you are familiar with the installation requirements for the power supply. If you want more information, each step in the procedure refers to subsequent sections which contain more details. Execute each step in the sequence given.

Table 2.1 Basic Setup Procedure

Step #	Description	Action	Reference
1	Inspection	Perform an initial physical inspection of the supply.	"Inspection, Cleaning, and Packaging" on page 24
2	Installation	Install the supply (bench or rack mount), ensuring adequate ventilation.	"Location, Mounting and Ventilation" on page 27
3	Input Power	Connect AC input power.	"AC Input Power" on page 28
4	Test	Perform functional tests for voltage mode operation, current mode operation, and front panel controls.	"Functional Tests" on page 30
5	Load	Connect the load.	"Load Connection" on page 32
6	Sensing	Connect sensing lines.	"Local and Remote Sensing" on page 35

See Section 3, "Operation" for instructions about front panel operation, OVP, OTP, shutdown, and using multiple supplies, plus you will find remote programming and monitoring described there.

Inspection, Cleaning, and Packaging

Initial Inspection

When you first receive your unit:

1. Inspect the unit for scratches and cracks, and for broken switches, connectors, and displays.
2. Ensure that the packing box contains the AC power cord.
3. Have the service technician check the printed circuit board and its components if you suspect internal damage.

If the unit is damaged, save all packing materials and notify the carrier immediately. See packing instructions on page 25.

Periodic Cleaning

No routine servicing of the power supply is required except for periodic cleaning. Whenever a unit is removed from operation, clean metal surfaces with naphtha or an equivalent solvent and the front panel with a weak solution of soap and water. Use low-pressure compressed air to blow dust from in and around components on the printed circuit boards.

Returning Power Supplies to the Manufacturer

Return Material Authorization Policy

Before returning a product directly to Xantrex you must obtain a Return Material Authorization (RMA) number and the correct factory "Ship To" address. Products must also be shipped prepaid. Product shipments will be refused and returned at your expense if they are unauthorized, returned without an RMA number clearly marked on the outside of the shipping box, if they are shipped collect, or if they are shipped to the wrong location.

When you contact Xantrex to obtain service, please have your operating manual ready for reference and be prepared to supply:

- The serial number of your product
- Information about the installation and use of the unit
- Information about the failure and/or reason for the return
- A copy of your dated proof of purchase

When you ship:

1. Package the unit safely following the procedures on page 26, preferably using the original box and packing materials. Please ensure that your product is shipped fully insured in the original packaging or equivalent. This warranty will not apply where the product is damaged due to improper packaging.
2. Include the following:
   - The RMA number supplied by Xantrex Technology Inc clearly marked on the outside of the box.
   - A return address where the unit can be shipped. Post office boxes are not acceptable.
   - A contact telephone number where you can be reached during work hours
   - A brief description of the problem

Ship the unit prepaid to the address provided by your Xantrex customer service representative.

If you are returning a product from outside of the USA or Canada:

In addition to the above, you MUST include return freight funds and are fully responsible for all documents, duties, tariffs, and deposits.

If you are returning a product to a Xantrex Authorized Service Center (ASC):

A Xantrex return material authorization (RMA) number is not required. However, you must contact the ASC prior to returning the product or presenting the unit to verify any return procedures that may apply to that particular facility.

Packaging for Shipping or Storage

Follow these instructions to prepare the unit for shipping or storage.

1. When returning the unit or sending it to the service center, attach a tag to the unit stating its model number, available from the front panel label, and its serial number, available from the rear panel label. Give the date of purchase and an invoice number, if you have it, as well as a brief description of the problem.
2. For storage or shipping, repack the power supply in its original container. If the original container is not available, seal the unit in a plastic bag and then pack it in a 200 lb. (90 kg) test, corrugated cardboard carton large enough to allow 2 in. (5 cm) of cushioning material to surround the unit. Use a material such as foam slabs or chips.
3. Label the carton as shown in Figure 2.1.
4. If shipping, mark the address of the service center and your return address on the carton.
5. If storing, stack no more than eight cartons high. Check the storage temperature range and storage altitude specification in "Environmental Specification" on page 20.

POWER SUPPLY

Model Number:

Serial Number:

FRAGILE — ELECTRONIC EQUIPMENT

Figure 2.1 Shipping or Storage Carton Label

Location, Mounting and Ventilation

Ventilation Requirements

The power supply may be used in rack mounted or benchtop applications. In either case, sufficient space must be allowed for cooling air to reach the ventilation inputs on the right hand side of the unit and for the fan exhaust air to exit from the rear of the unit.

Rack Mounting

The power supply is designed to fit in a standard 19 in. equipment rack. Use the rack mount brackets at either end of the front panel to install the power supply in a rack. Use adjustable support angles such as Hammond RASA22WH2, or a support bar such as Hammond RASB19WH2. Do not use with rack mount slides.

AC Input Power

AC Input Voltage Selection

WARNING
Exercise caution when using and servicing power supplies. High energy levels can be stored at the output terminals on all power supplies in normal operation. In addition, potentially lethal voltages exist in the power circuit and the output connector of power supplies which are rated at 40V and over. Filter capacitors store potentially dangerous energy for some time after power is removed.

WARNING
To provide protection for personnel in the case of unit failure and to ensure proper power supply operation, the safety ground wire of the AC input line must **ALWAYS** be connected to the ground screw provided.

WARNING
Attempted operation of the power supply with the incorrect input voltage may result in internal damage to the unit.

Before using the power supply, the correct AC input voltage must be selected and an appropriate line cord and plug attached. All units are shipped in a configuration requiring a 200-250Vac 10 A input. The unit can also be converted for use with a 100-130Vac 20 A input.

200-250Vac Input Connect a 250Vac 15 A plug and cord to the rear panel AC connector and the safety ground screw.

Note: The NEUT. and LINE designations above the AC connector apply to the 100-130Vac 20 A input but do not apply to 200-250V operation.

100-130Vac 20A Input To convert the unit for use with a 100-130Vac 20 A input, perform the following steps:

1. Ensure that the unit is switched off and disconnected from any power source.
2. Remove the Phillips head screws which secure the cover and then remove the cover from the unit.
3. Remove the 230Vac voltage selector jumper located at the front center of the PCB from its mating header (designated P1 on the PCB) and install the attached 115Vac jumper in its place.
4. Reinstall the cover and replace the screws.
5. Use the adhesive backed 115Vac 20A label supplied with the unit to cover the 230Vac 10A input specification above the rear panel AC connector.
6. Install a 130Vac 25A plug and cord ensuring that the neutral (white) wire and line (black) wire are connected in the correct positions and that the safety ground wire is connected to the ground screw.

Input Line Impedance

The maximum input line impedance for operation at full rated output is 1 ohm. Higher source impedances can be tolerated by raising the input line voltage or by reducing the output voltage and/or current.

Functional Tests

Before connecting the unit to an AC outlet, make sure that the power switch is in the OFF position and that the voltage and current controls are turned fully counter clockwise. Check that the J3 mating connector on the rear of the unit is in place with jumpers connected for local operation as shown below. (This is the default configuration as shipped from the factory). Connect the unit to a 230Vac grounded outlet (115Vac outlet if previously configured for 115Vac operation as per instructions in "AC Input Voltage Selection" on page 28) and switch the unit on. After a short power on delay the front panel meters should light up with both displays reading zero.

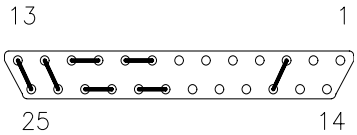

Figure 2.2 Connector J3 Configuration for Local Operation

Voltage Mode Operation

To check voltage mode operation, proceed as follows:

1. Connect a DVM, rated better than 0.5% accuracy, to the rear output terminals, observing correct polarity.
2. Rotate the CURRENT control 1/2 turn clockwise. Slowly rotate the VOLTAGE control clockwise and observe both the internal and external meters. Minimum control range should be from zero to the maximum rated output. Compare the test meter reading with the front panel voltmeter reading. Check that the green voltage mode indicator led is ON.
3. Set the POWER switch to OFF.

Current Mode Operation

To check current mode operation, proceed as follows:

1. Rotate the VOLTAGE and CURRENT controls fully counterclockwise.
2. Rotate the VOLTAGE control 1/2 turn clockwise.
3. Connect a high current DC ammeter[1] across the rear output terminals, observing correct polarity. Select leads of sufficient current carrying capacity and an ammeter range compatible with the unit's rated current output. The ammeter should have an accuracy of better than 0.5%.
4. Set the POWER switch to ON.
5. Rotate the CURRENT control slowly clockwise. The control range should be from zero to the maximum rated output. Compare the test meter reading with the reading on the front panel ammeter. Check that the red current mode indicator led is ON.
6. Set the POWER switch to OFF.

---

1. Either a direct reading meter or calibrated meter and shunt combination.

Load Connection

Reliable performance of the power supply can be obtained if certain basic precautions are taken when connecting it for use on the lab bench or installing it in a system.

To obtain a stable, low noise output, careful attention should be paid to factors such as conductor ratings, system grounding techniques and the way in which the load and remote sensing connections are made.

Load Conductor Ratings

As a minimum, load wiring must have a current capacity greater than the output current rating of the power supply. This ensures that the wiring will not be damaged even if the load is shorted. Table 2.2 shows the maximum current rating, based on 450 A/cm^2, for various gauges of wire rated for 105 °C operation. Operating at the maximum current rating results in an approximately 30 °C temperature rise for a wire operating in free air. Where load wiring must operate in areas with elevated ambient temperatures or bundled with other wiring, use larger gauges or wiring rated for higher temperatures.

Table 2.2 Current Carrying Capacity for Load Wiring

Wire Size (AWG)	Maximum Current (A)	Wire Size (AWG)	Maximum Current (A)
20	2.5	6	61
18	4	4	97
16	6	2	155
14	10	1	192
12	16	1/0	247
10	21	2/0	303
8	36		

Load Connection and Grounding

WARNING
Exercise caution when using and servicing power supplies. High energy levels can be stored at the output voltage terminals on all power supplies in normal operation. In addition, potentially lethal voltages exist in the power circuit and the output connector of power supplies which are rated at 40V and over. Filter capacitors store potentially dangerous energy for some time after power is removed.

Proper connection of distributed loads is an important aspect of power supply application. A common mistake is to connect leads from the power supply to one load, from that load to the next load, and so on for each load in the system. In this **parallel power distribution** method, the voltage at each load depends on the current drawn by the other loads and DC ground loops are developed. Except for low current applications, this method should not be used.

The preferred way to distribute power is by the **radial distribution** method in which power is connected to each load individually from a single pair of terminals designated as the positive and negative distribution terminals. The pair of terminals may be the power supply output terminals, the terminals of one of the loads or a distinct set of terminals especially established for distribution. Connecting the sense leads to these terminals will compensate for losses and minimize the effect of one load upon another.

Inductive Loads To prevent damage to the power supply from inductive kickback, connect a diode (rated at greater than the supply's output voltage and with a current surge rating greater than or equal to the supply's output current rating) across the output. Connect the cathode to the positive output and the anode to return. Where positive load transients such as back EMF from a motor may occur, connect a transorb or a varistor (with a breakdown voltage approximately 10% higher than the rated supply output) across the output to protect the power supply.

Output Cord Strain Relief

Assemble the strain relief from supplied pieces and attach it to the DC output connector on 150V, 300V, and 600V models to provide support for the output cord.

Parts Supplied •

- Two (2) pieces of 6 position, cap housing strain relief.
- Two (2) #6-32 x 5/8 in. screws.

Assembly Instructions

1. Snap off the rectangular bushing attached to each piece of the strain relief. See Figure 2.3.

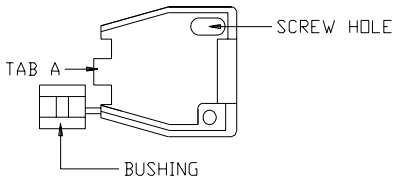

Figure 2.3 Strain Relief
(One piece, inside view)

2. Install bushings on strain relief pieces, as required. Cable diameter must be between 0.120" and 0.650".
3. Insert strain relief tab A into DC output connector slot A. Insert strain relief tab B into DC output connector slot B. See Figure 2.4.
4. Install screws in holes provided on outside of strain relief pieces. Thread through to screw standoff inside opposite piece. Tighten to clamp outer jacket of output cord securely, ensuring that the side of the strain relief slips into the corresponding rabbet on the opposite piece.

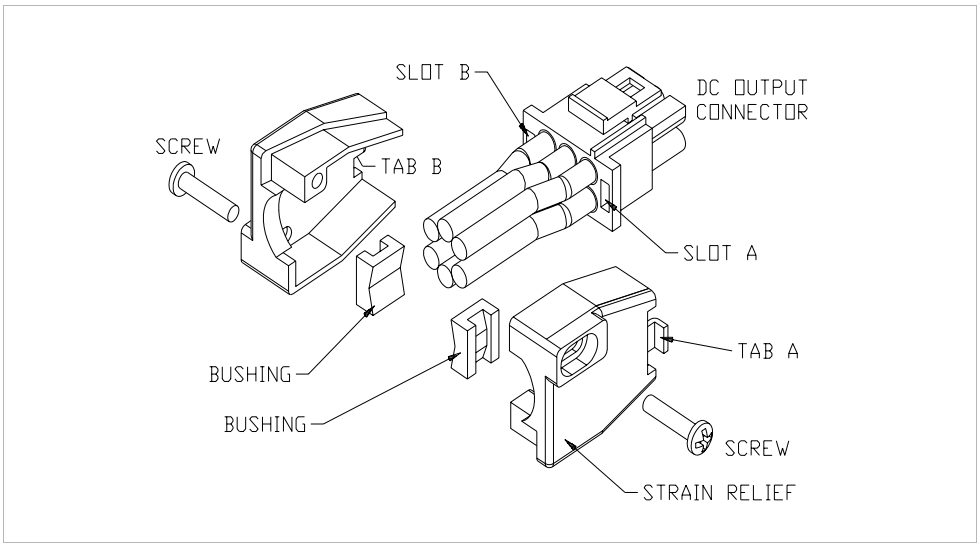

Figure 2.4 Strain Relief Assembly

Local and Remote Sensing

The use of remote sensing permits the regulation point of the power supply to be shifted from the output terminals (local sensing) to the load or other distribution terminals, thereby automatically compensating for the voltage losses in the leads supplying the load (provided these losses do not exceed 0.5V/line for the 8V model or 1V/line for all other models). For example, with the voltmeter reading 10.0 volts and the sense lines connected directly to the load, the load voltage will remain regulated at 10.0 volts regardless of the voltage drops in the power leads and variations in the load current.

On 8V, 20V, 33V, 40V, 60V, and 80V models, the positive sense connection is available at pin 13 of connector J3 and the return sense connection is available at pin 12. For local sensing (regulation at the power supply output terminals), the sense pins are connected to pins 25 (positive output) and 24 (return) of connector J3. For remote sensing, the local operation jumpers are removed and pins 13 and 12 are connected directly to the positive and negative terminals of the load.

On 150V, 300V, and 600V models, the sense connections are available through the output connector. (See Figure 1.3, “J3 Program, Sense, and Monitor Connector Description” on page 16 for the exact pin out.) On these models, no sense line jumpers are required for local operation.

Sense wires can be any size (24AWG or larger) but in high noise environments or when the lowest possible power supply ripple is required, sense wires must be twisted and/or shielded.

Notes:

- On 8V to 80V models the sense leads must always be connected, either for remote or local sensing. Operation of the supply with the sense leads disconnected will cause the output to fall to zero or to be unregulated.
- **NEVER** use the sense connections without the normal power lead connections to the output terminals. Avoid reversing positive and negative sense lead connections.

Section 3. Operation

Single Supply Operation (Local Mode)

To operate the power supply in local mode, first install the unit and connect the load following the instructions in Section 2, "Installation". For further information see "Remote Programming of Output Voltage and Current Limit" on page 47 for complete description of switch SW1 functions. See Figure 1.3, on page 16 for J3 connector pinouts.

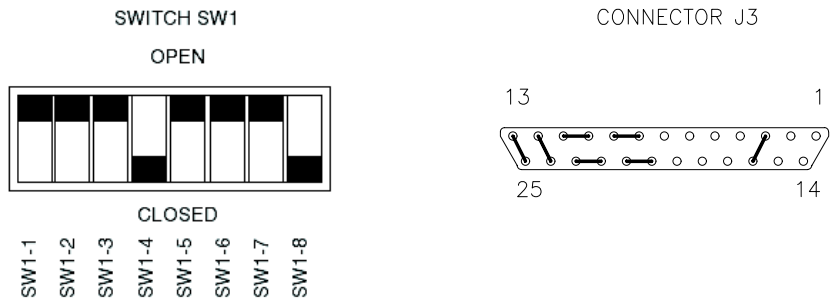

Figure 3.1 Switch SW1 and Connector J3 Configuration for Local Operation (Default factory settings)

Setup

Check that switch SW1 (mounted internally on the main printed circuit board) is set for local operation (the factory default) and that the J3 mating connector on the rear of the unit is in place with jumpers connected for local operation (also the factory default). See Figure 3.1. Set both the current and voltage controls fully counterclockwise.

Voltage Mode Operation

For voltage mode operation, turn the current control fully clockwise and then adjust the voltage control to obtain the desired output voltage.

Current Mode Operation

For current mode operation, turn the voltage control 1/2 turn clockwise, the current control fully counterclockwise and connect an appropriately-sized shorting jumper across the output terminals. Turn the current control clockwise until the desired output current is obtained. Turn the power supply off, remove the shorting jumper, turn the voltage control fully clockwise and turn the power supply on.

Note: For a short period (less than 2 seconds) after power on, the power supply output is disabled and the current mode LED is illuminated while the main filter capacitors charge through the inrush limiter.

Multiple Supplies

CAUTION
All remote programming input and monitoring lines are internally referenced to the supply's negative output. Do not reference remote programming or monitor lines to the supply's positive output. J3 pin 6 (ground) is directly connected to the supply's negative output. Do not connect this pin to the positive output or to the chassis.

Power supplies of the SAME MODEL in this series may be operated with outputs in series or parallel to obtain increased load voltage or current. Split supply operation allows two positive or a positive and negative output to be obtained.

Note: If your application requires the use of isolated programming inputs, contact the factory about the optional ISOL interface.

Series Operation

CAUTION
Do not use remote sensing during series operation.

Series operation is used to obtain a higher voltage single output supply using two or more single units. Connect the negative terminal (-) of one supply to the positive terminal (+) of the next supply. The total voltage available is the sum of the maximum voltages of each supply (add voltmeter readings). The maximum allowable current for a series string of power supplies is the rated output current of a single supply in the string.

Note: The maximum allowable sum of the output voltages is 600V. This is limited by the voltage rating of certain internal components.

Parallel Operation

Parallel operation is used to obtain a higher current single output supply using two or more single units. Set all of the outputs to the same voltage before connecting the positive terminals (+) and negative terminals (-) in parallel. The total current available is the sum of the maximum currents of each supply.

Sensing for Parallel Operation Use default local sensing to enhance power sharing between units, as the impedance of the load lines will tend to correct for current imbalance. If you use remote sensing at the load for better voltage regulation, one supply always operates in current limit mode and supplies most of the power.

OVP for Parallel Operation

CAUTION
To prevent internal damage, ensure that the OVP trip level of all supplies is set to maximum.

If you should have a problem with external transients tripping the OVP circuit, you have two solutions. One is to add a diode in series with the output line or the return line. This diode must have a reverse voltage and current rating greater than the power supply output. The second solution is to disable the OVP circuit by removing resistor R93 from the A2 PCB.

CAUTION
Disabling the OVP circuit will not allow for protection of the load in the event of a remote programming error, incorrect voltage control adjustment, or power supply failure.

Split Supply Operation

Split supply operation is used to obtain two positive voltages with a common ground, or a positive-negative supply.

To obtain **two positive voltages**, connect the negative terminals of both supplies together. The positive terminals will supply the required voltages with respect to the common connection.

To obtain a **positive-negative supply**, connect the negative terminal of one supply to the positive terminal of the second supply. The positive terminal of the first supply then provides a positive voltage relative to the common connection while the negative terminal of the second supply provides a negative voltage. The current limits can be set independently. The maximum current available in split operation is equal to the rated output of the supplies used.

Over Voltage Protection (OVP)

The OVP circuit allows for protection of the load in the event of a remote programming error, incorrect voltage control adjustment, or power supply failure. The protection circuit monitors the output and reduces the output voltage and current to zero whenever a preset voltage limit is exceeded. A red LED on the front panel indicates when the OVP circuit has been activated. Resetting the OVP circuit after activation requires removal of the overvoltage condition and powering the unit OFF and back ON or momentarily activating the remote shut down circuit. See "Remote ON/OFF" on page 46 for information on shutdown circuit operation. The OVP trip level can be set using either the front panel potentiometer or by using one of three remote programming methods (voltage, resistance or current) through the J3 connector at the rear of the unit. Please see "Parallel Operation" on page 39 for how to disable OVP for parallel operation.

Front Panel OVP Operation

To set the trip level from the front panel use the following procedure:

1. With the unit off and disconnected from its AC source remove the cover and check that switches SW1-4 and SW1-8 are closed (factory default setting). Also check that the jumper between pins 3 and 16 of connector J3 is in place.
2. Using a small, flat-bladed screwdriver through the OVP ADJUST hole in the front panel, turn the adjusting screw fully clockwise (until audible clicking is heard or 20 turns maximum).
3. Turn the unit on and adjust the output to the desired trip voltage.
4. Slowly turn the adjusting screw counter clockwise until the red OVP indicator lamp lights.
5. Turn the POWER switch to OFF.
6. Turn the voltage control knob to minimum.
7. Turn the POWER switch back ON and increase the voltage to check that the power supply shuts off the output at the desired voltage.

Remote Programming of OVP With External Voltage Sources

To remotely program the OVP trip level using a 0-5V DC (Figure 3.2) or 0-10V DC (Figure 3.3) voltage source use the following procedure.

1. With the unit off and disconnected from its AC source, remove the cover and set switch SW1-4 closed (default factory setting) for 0-5V programming or open for 0-10V programming. Also check that switch SW1-8 is closed (default factory setting). Set the front panel OVP adjusting potentiometer fully clockwise (until audible clicking is heard or 20 turns maximum).
2. Remove the default jumper connecting pins 16 and 3 of connector J3 and connect the voltage source between pins 3 (positive) and 12 (negative). Set the programming source voltage to maximum.
3. Turn the unit on and adjust the output to the desired trip voltage.
4. Slowly reduce the programming voltage until the red OVP indicator lamp lights and the power supply shuts down.
5. Turn the POWER switch to OFF.
6. Turn the voltage control knob to minimum.
7. Turn the POWER switch back ON and increase the voltage to check that the power supply shuts off the output at the desired voltage.

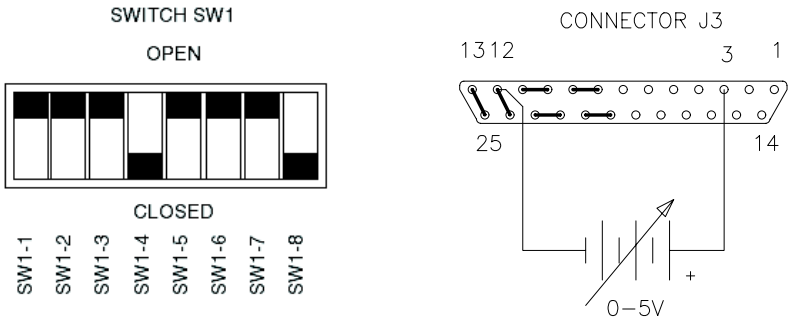

Figure 3.2 SW1/J3 Configuration for 0-5Vdc OVP Programming
(J3 sense line, voltage and current control jumpers shown set for local operation)

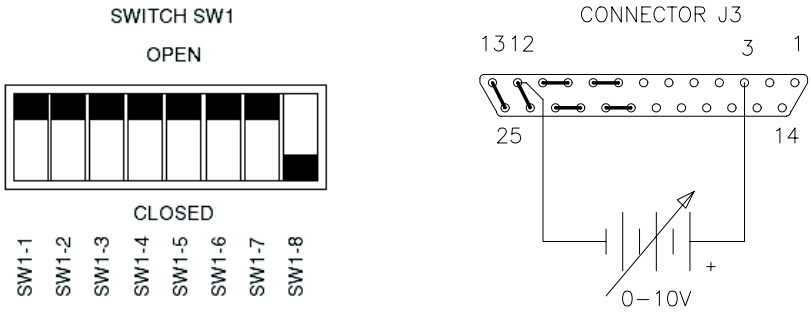

Figure 3.3 SW1/J3 Configuration for 0-10Vdc OVP Programming
(J3 sense line, voltage and current control jumpers shown set for local operation)

Remote Programming of OVP with an External Resistance

To remotely program the OVP trip level using a 5k ohm external potentiometer, use the following procedure.

1. With the unit off and disconnected from its AC source remove, the cover, set switch SW1-8 open and check that switch SW1-4 is closed (default factory setting for switch SW1-4).
2. Connect the counter clockwise end of the 5k potentiometer to pins 3 and 16 of connector J3. Connect the tap and the clockwise end of the potentiometer to pin 12. Set the potentiometer fully clockwise.
3. Turn the unit on and adjust the output to the desired trip voltage.
4. Slowly turn the potentiometer counter clockwise until the red OVP indicator lamp lights and the power supply shuts down.
5. Turn the POWER switch to OFF.
6. Turn the voltage control knob to minimum.
7. Turn the POWER switch back ON and increase the voltage to check that the power supply shuts off the output at the desired voltage.

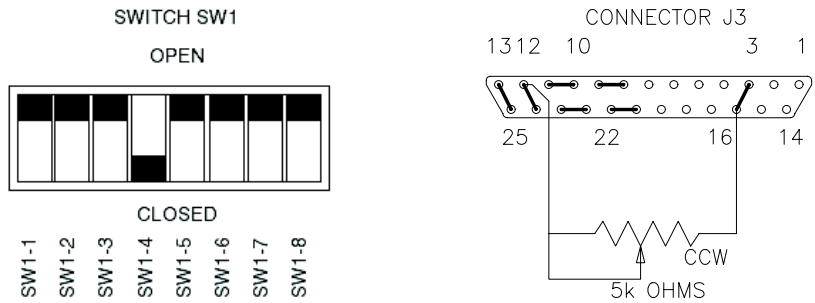

Figure 3.4 SW1/J3 Configuration for 0-5k OVP Programming
(J3 sense line, voltage and current control jumpers shown set for local operation)

Remote Programming of OVP with External Current Sources

To remotely program the OVP trip level using a 0-1mA current source, use the following procedure.

1. With the unit off and disconnected from its AC source, remove the cover and set switches SW1-4 and SW1-8 closed (default factory setting).
2. Using a small, flat-bladed screwdriver through the OVP ADJUST hole in the front panel, turn the adjusting screw fully clockwise (until audible clicking is heard or 20 turns maximum).
3. Remove the default jumper connecting pins 16 and 3 of connector J3 and connect the current source between pins 3 (positive) and 12 (negative). Set the programming source to 1mA.
4. Turn the unit on and adjust the output to the desired trip voltage.
5. Slowly reduce the programming current until the red OVP indicator lamp lights and the power supply shuts down.
6. Turn the POWER switch to OFF.
7. Turn the voltage control knob to minimum.
8. Turn the POWER switch back ON and increase the voltage to check that the power supply shuts off the output at the desired voltage.

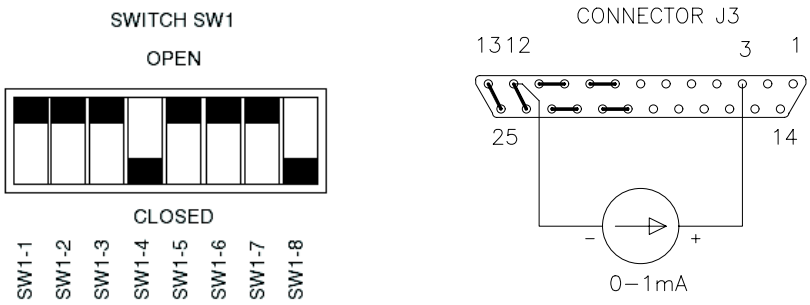

Figure 3.5 SW1/J3 Configuration for 0-1mA Current Source OVP Programming
(J3 sense line, voltage and current control jumpers shown set for local operation)

Remote OVP Sensing

The default configuration for the OVP circuit senses the output voltage at the power supply output terminals. For applications using remote sensing where there is a need to accurately monitor the actual load voltage, the following procedure allows the OVP sense point to be shifted from the power supply output to the sense line connection points.

1. Shut the unit off and disconnect it from its power source. Remove the cover from the unit.
2. Using a sharp exacto knife, cut the component side trace connecting the right hand side of resistor R89 to the via marked OVP-LOC.
3. Install a piece of insulated #22 AWG wire from the via marked OVP-RMT C (near the trace cut just made) to the via marked OVP-RMT C1 (near capacitor C51).
4. Reinstall the cover and reconnect the unit to its power source.

To return to local OVP sensing, remove the jumper installed in step 3 above and install a jumper across the trace cut made in step 2.

Remote ON/OFF

CAUTION
The external voltage applied to pins 1 and 2 (Shutdown input and return) cannot exceed 250V rms with respect to the supply's negative output or the supply may be damaged.

This feature is useful in test applications requiring remote ON-OFF control of the output. The remote ON-OFF control circuit uses either a TTL compatible or a 12-250Vac (or 12-130Vdc) input to remotely control (disable or enable) the power supply output. For TTL operation, a logic level signal between pins 14 (positive) and 2 (return) of connector J3 determines the output conditions:

TTL LOW = OUTPUT ON

TTL HIGH = OUTPUT OFF

For AC or DC operation, an input of 12-250Vac (or 12-130Vdc) between pins 1 (positive for DC input) and 2 (return) of connector J3 will disable the output of the supply.

A red LED on the front panel indicates when the shutdown circuit is activated. The input lines are optically isolated and can therefore be accessed by circuits with a voltage differential of up to 600Vdc.

Remote ON/OFF by Contact Closure

An external relay may be used to operate the ON/OFF control circuit as follows. Connect one side of a normally open relay to pin 15 of connector J3 (+12V). Connect the other side of the relay to pin 14 (TTL Shutdown). Also connect J3 pin 2 (Shutdown return) to pin 6 (Ground). Using this configuration, the power supply will be OFF when the relay coil is energized and ON when the relay is de-energized.

If a normally closed relay is substituted for the normally open relay in the configuration described above, the power supply will be ON when the relay coil is energized and OFF when the relay is de-energized.

Remote Programming of Output Voltage and Current Limit

Remote Programming Switch SW1

CAUTION
The remote programming input is internally referenced to the supply's negative output. Do not connect remote programming input lines (J3 pins 9 and 10) to the supply's positive output.

The output voltage and current limit of the power supply can be remotely programmed through the rear panel J3 connector (Figure 3.6) using external voltage sources, current sources, and resistances. Switch SW1 on the A2 printed circuit board controls the programming as diagrammed below. When the supply is controlled by remote programming, the green REMOTE led on the front panel is illuminated.

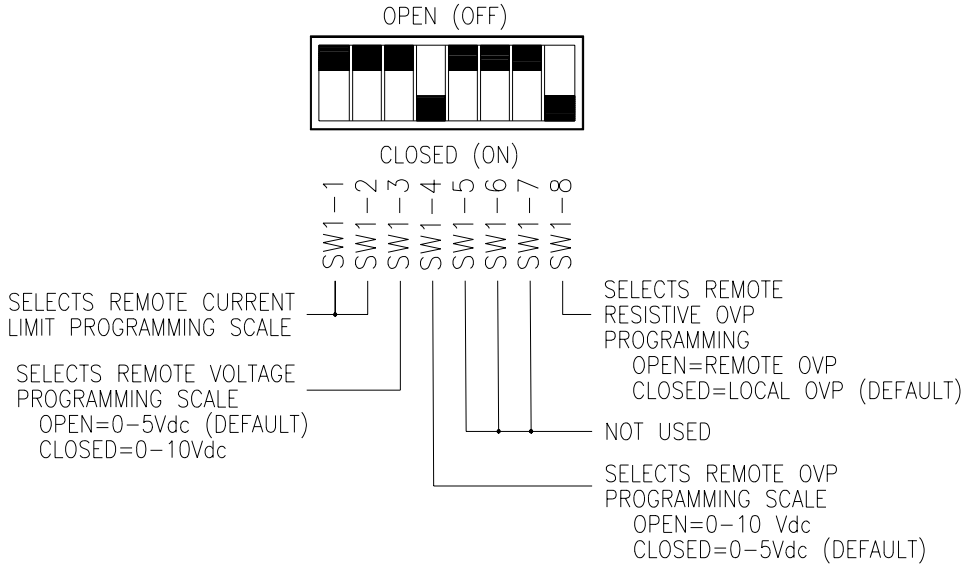

Figure 3.6 Switch SW1 Functions
(Default Settings Shown)

Notes:

- SW-1 and SW-2 are used in combination to select 0-5Vdc, 0-10Vdc, and 0-100mA. See Table 3.1, “Program Voltage Selection,” on page 49 for settings.
- To set switch SW1 shut the unit off, disconnect it from its AC source and remove the cover. Make the appropriate switch settings then reinstall the cover and reconnect the unit to its AC source.

Programming With External Voltage Sources

The **output voltage** can be programmed using either a 0-5Vdc or 0-10Vdc external voltage source. To program the output voltage with a 0-5Vdc source, set switch SW1-3 open (default factory setting) and remove the jumpers connecting pins 8 to 9 and 20 to 21 on connector J3. Connect the external source between pins 9 (positive) and 12 (return). Varying the external voltage from 0-5V will cause the output to vary from 0-100% of rated output.

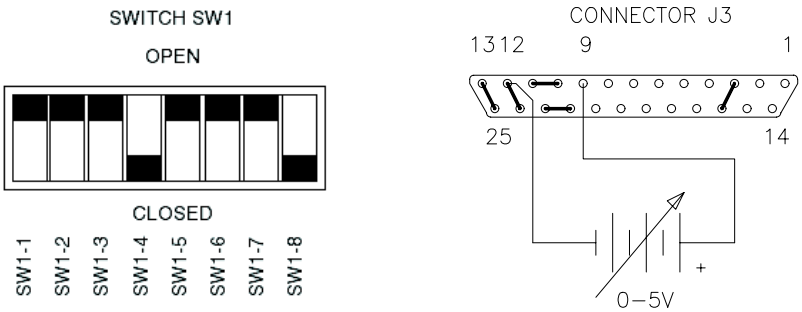

Figure 3.7 SW1/J3 Configuration for 0-5V Programming of the Output Voltage
(J3 sense line, OVP and current control jumpers shown set for local operation)

For programming with a 0-10Vdc source, close switch SW1-3 and replace the 0-5V source with a 0-10V source.

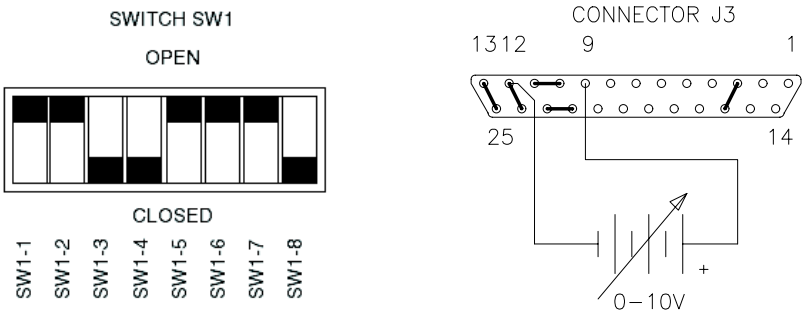

Figure 3.8 SW1/J3 Configuration for 0-10V Programming of the Output Voltage
(J3 sense line, OVP and current control jumpers shown set for local operation)

The **output current limit** can be programmed using a 0-100mVdc, 0-5Vdc or 0-10Vdc external voltage source. Selection of the programming voltage is done using switches SW1-1 and SW1-2 as indicated in Table 3.1.

Table 3.1 Program Voltage Selection

SW1-1	SW1-2	Programming Voltage
OPEN	OPEN	0-5 Vdc and Local Mode
OPEN	CLOSED	0-100 mVdc
CLOSED	CLOSED	Not Used
CLOSED	OPEN	0-10 Vdc

To remotely program the output current limit, set switches SW1-1 and SW1-2 as shown above, remove the jumpers connecting pins 10 to 11 and 22 to 23 of connector J3 and connect the external voltage source between pins 10 (positive) and 12 (return). Varying the voltage source from 0-100% causes the current limit to vary from 0-100% of the rated maximum.

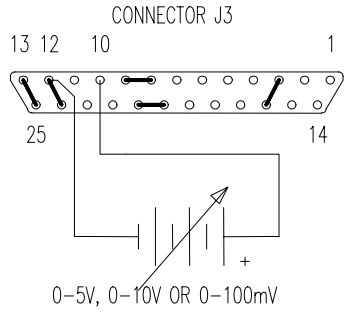

Figure 3.9 J3 Configuration for Remote Programming of the Output Current Limit
(J3 sense line, OVP and voltage control jumpers shown set for local operation)

Programming With an External Resistance

The output voltage and current limit can be programmed using a 5k ohm external potentiometer.

To program the **output voltage**, set switch SW1-3 open (default factory setting) and remove the jumpers connecting pins 8 to 9 and 20 to 21 on connector J3. Connect pins 9 and 21 to the counterclockwise end of the 5k potentiometer and connect the tap and clockwise end of the potentiometer to pin 12. Adjusting the tapped resistance from 0-5k will vary the output voltage from 0-100% of the rated output.

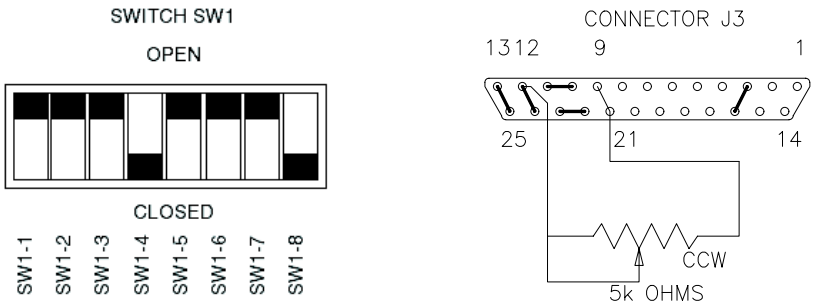

Figure 3.10 SW1/J3 Configuration for Resistive Programming of Output Voltage
(J3 sense line, OVP and current control jumpers shown set for local operation)

To program the **output current limit**, set switches SW1-1 and SW1-2 open (default factory setting) and remove the jumpers connecting pins 10 to 11 and 22 to 23 on connector J3. Connect pins 10 and 22 to the counterclockwise end of the 5k potentiometer and connect the tap and clockwise end of the potentiometer to pin 12. Adjusting the tapped resistance from 0-5k will vary the current limit from 0-100% of the rated output.

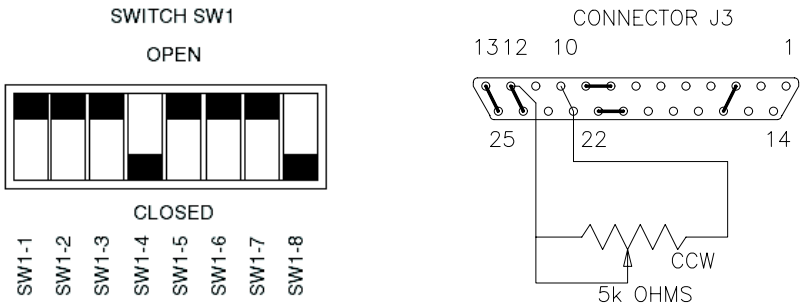

Figure 3.11 SW1/J3 Configuration for Resistive Programming of Output Current Limit
(J3 sense line, OVP and voltage control jumpers shown set for local operation)

Programming With an External Current Source

The output voltage and current limit can be programmed using an external 0-1mA current source.

To program the **output voltage**, set the front panel voltage control to maximum, set switch SW1-3 open (default factory setting) and remove the jumper between pins 20 and 21 of connector J3. Connect the external current source between pins 8 (positive) and 12 (return) of connector J3. Varying the current source from 0-1mA will vary the output voltage from 0-100% of the rated output.

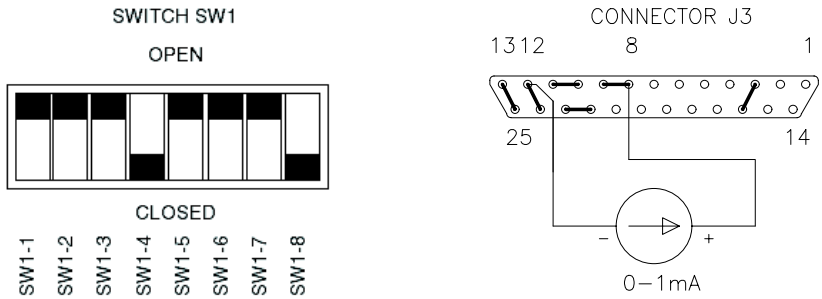

Figure 3.12 SW1/J3 Configuration for 0-1mA Current Programming of the Output Voltage
(J3 sense line, OVP and current control jumpers shown set for local operation)

To program the **output current limit**, set the current control to maximum, set switches SW1-1 and SW1-2 open (factory setting) and remove the jumper between pins 22 and 23 of connector J3. Connect the external current source between pins 11 (positive) and 12 (return). Varying the current source from 0-1mA causes the current limit to vary from 0-100% of rated maximum.

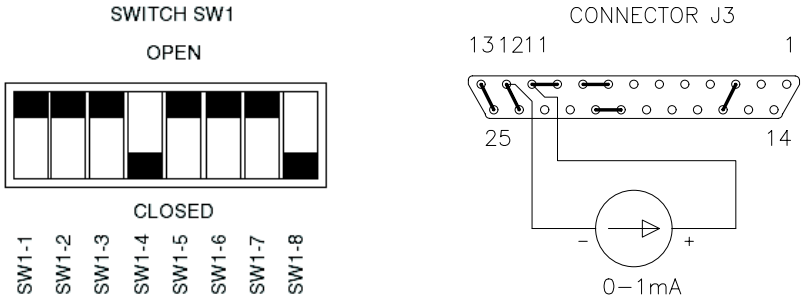

Figure 3.13 SW1/J3 Configuration for 0-1mA Current Programming of the Output Current Limit
(J3 sense line, OVP and voltage control jumpers shown set for local operation)

Remote Monitoring and Status Indicators

Readback signals for remote monitoring of the output voltage and current are available at connector J3 on the rear of the unit. A 0-5V (uncalibrated) signal between pins 19 (positive) and 12 (negative) represents 0-100% of the rated output voltage. A 0-5V (calibrated) signal between pins 7 (positive) and 12 (negative) represents 0-100% of the rated output current. The offset and gain of the current readback signal may be adjusted through holes in the cover of the unit. See Section 4, "Calibration" for location of adjusting holes.

Status indicators for thermal shutdown, OVP operation, remote programming and operating mode are also available through the J3 connector. Table 3.2, "Status Indicators," lists the various signals, the J3 connector pins where they are available, the approximate magnitude of the signal (measured with respect to pin 6 of connector J3) and the source impedance through which the signal is fed.

Table 3.2 Status Indicators

Indicator Signal	J3 Pin	Signal Voltage	Source Impedance
Thermal Shutdown	18	+10 V	750Ω
OVP Circuit Activated	17	+9 V	750Ω
Remote Programming	4	+10 V	750Ω
Voltage Mode Operation	5	+10 V	750Ω
Current Mode Operation	5	- 3 V	750Ω

Note: To obtain a 0-10V readback signal, you must use an external instrumentation amplifier with the 0-5V signal.

Using Over Temperature Protection (OTP)

The OTP circuit protects the power supply in the event of excessive temperature. The protection circuit monitors the temperature of a supply heatsink using a temperature sensor, and will activate the internal shutdown circuit whenever the maximum temperature is exceeded.

The red OTP LED on the front panel lights up when an OTP shutdown occurs.

Resetting the OTP circuit

To reset the OTP after it activates:

1. The supply recovers to normal operation when the over temperature condition no longer exists.

OR

1. Turn the AC power switch OFF.
2. Correct the situation causing the over temperature condition.
3. Turn the AC power switch ON.

Section 4. Calibration

Introduction

WARNING
Exercise caution when using and calibrating a power supply. High energy levels can be stored at the output voltage terminals on a power supply in normal operation. In addition, potentially lethal voltages exist in the power circuit and on the output and sense connectors of a power supply with a rated output greater than 40 V. Filter capacitors store potentially dangerous energy for some time after power is removed.

Adjustments to programming and readback accuracy for the power supply are made using cover-on procedures. For safety, follow these instructions carefully.

Calibration Setup

Service Environment and Precautions

- Follow established antistatic procedures.
- Work at a bench with adequate room and support for the unit under test and for all equipment required.
- To reduce shock hazard, use only an insulated, straight-blade screwdriver when calibrating trim potentiometers.
- NEVER calibrate these units alone. Ensure that someone is present who can help should an accident occur.

Calibration on both the A1 and A2 assemblies is accomplished using multiturn trimpots. Table 4.1 below gives the circuit designation of the trimpot and the parameter affected by that part. Calibration is performed at the factory during testing and recalibration should be unnecessary unless major repairs are required. Calibration should be done with the cover on through the access holes in the cover. See Figure 4.1.

WARNING
Use a non-conducting, straight-blade screwdriver to adjust the trim pots.

Calibrating

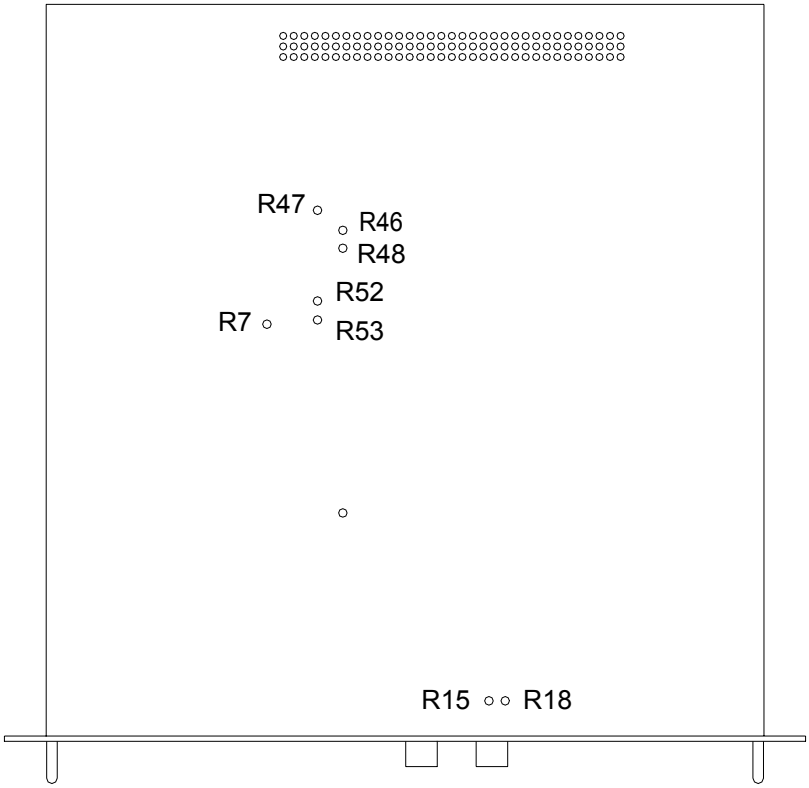

Figure 4.1 Calibration Adjustment Locations

Table 4.1 Calibration Trimpot Designations and Parameters

Designation	Assembly	Parameter Affected
R7	A2	Output Current Monitor Calibration
R46	A2	Output Current Monitor Offset
R47	A2	Current Control Circuit Offset
R48	A2	Output Current Range
R52	A2	Voltage Control Circuit Offset
R53	A2	Output Voltage Range
R18	A1	Front Panel Voltmeter Calibration
R15	A1	Front Panel Ammeter Calibration

Xantrex Technology Inc.

8999 Nelson Way
Burnaby, British Columbia
Canada V5A 4B5

604 422 8595 Tel
604 421 3056 Fax
800 667 8422 Toll Free North America

prg.info@xantrex.com
www.xantrex.com

TM-10OP-01XN

PRINTED IN CANADA