A735-01-880
Issue A Original

Instruction Manual

nXDS Scroll Pump

Description	Item Number
nXDS6i	A735-01-983
nXDS10i	A736-01-983
nXDS15i	A737-01-983
nXDS20i	A738-01-983
nXDS6iC	A735-02-983
nXDS10iC	A736-02-983
nXDS15iC	A737-02-983
nXDS20iC	A738-02-983
nXDS6iR	A735-03-983
nXDS10iR	A736-03-983
nXDS15iR	A737-03-983
nXDS20iR	A738-03-983

WWW.EDWARDSVACUUM.COM

Declaration of Conformity

We, Edwards,
Manor Royal,
Crawley,
West Sussex, RH10 9LW, UK

declare under our sole responsibility, as manufacturer and person within the EU authorised to assemble the technical file, that the product(s)

nXDS6i scroll pump	100-127 VAC, 200-240 VAC, 50/60 Hz	A735-01-983
nXDS10i scroll pump	100-127 VAC, 200-240 VAC, 50/60 Hz	A736-01-983
nXDS15i scroll pump	100-127 VAC, 200-240 VAC, 50/60 Hz	A737-01-983
nXDS20i scroll pump	100-127 VAC, 200-240 VAC, 50/60 Hz	A738-01-983
nXDS6iC scroll pump	100-127 VAC, 200-240 VAC, 50/60 Hz	A735-02-983
nXDS10iC scroll pump	100-127 VAC, 200-240 VAC, 50/60 Hz	A736-02-983
nXDS15iC scroll pump	100-127 VAC, 200-240 VAC, 50/60 Hz	A737-02-983
nXDS20iC scroll pump	100-127 VAC, 200-240 VAC, 50/60 Hz	A738-02-983
nXDS6iR scroll pump	100-127 VAC, 200-240 VAC, 50/60 Hz	A735-03-983
nXDS10iR scroll pump	100-127 VAC, 200-240 VAC, 50/60 Hz	A736-03-983
nXDS15iR scroll pump	100-127 VAC, 200-240 VAC, 50/60 Hz	A737-03-983
nXDS20iR scroll pump	100-127 VAC, 200-240 VAC, 50/60 Hz	A738-03-983

to which this declaration relates is in conformity with the following standard(s) or other normative document(s)

EN1012-2:1996, A1: 2009	Compressors and Vacuum Pumps - Safety Requirements – Part 2 Vacuum Pumps
EN61010-1: 2010	Safety Requirements for Electrical Equipment for Measurement, Control and Laboratory Use. General Requirements
EN61326-1: 2006	Electrical equipment for measurement, control and laboratory Use. EMC requirements. General requirements
EN13463-1: 2009	Non-electrical equipment for use in potentially explosive atmospheres. Basic method and requirements
EN13463-5: 2003	Non-electrical equipment for use in potentially explosive atmospheres. Protection by constructional safety
CAN/CSA-C22.2 No.61010.1-04	Safety Requirements for electrical equipment for Measurement, Control and Laboratory Use, Part 1: General requirements
UL std. No.61010-1	Safety Requirements for electrical equipment for Measurement, Control and Laboratory Use, Part 1: General requirements

and fulfils all the relevant provisions of

2006/42/EC	Machinery Directive
2006/95/EC	Low Voltage Directive
2004/108/EC	Electromagnetic Compatibility (EMC) Directive
94/9/EC	ATEX Directive on use in Potentially Explosive Atmospheres

Ex II 3 G c IIB T4 Internal Atmospheres Only, Tech File ref MPTR 0271

2002/95/EC*	Restriction of Certain Hazardous Substances (RoHS) Directive

** i.e. The product(s) contain less than - 0.1wt% for hexavalent chromium, lead, mercury, PBB and PBDE; 0.01wt% for cadmium - in homogeneous materials (subject to the exemptions allowed by the Directive). This information relates only to products sold on or after the date of this certificate. Edwards has taken all reasonable steps to confirm this statement, which is based mainly on information from our suppliers. Whilst the RoHS Directive does not legally apply to this vacuum equipment, we recognize that component compliance is relevant to many of our customers.*

Note: This declaration covers all product serial numbers from the date this Declaration was signed onwards.

25.04.2012 Burgess Hill

Barrie Brewster, Technical Manager, Burgess Hill Products

Date and Place

This product has been manufactured under a quality system registered to ISO9001

P200-06-720 Issue B

Contents

Section		Page
1	Introduction	1
1.1	Scope of this manual	1
1.2	ATEX directive implication	2
1.3	General description	3
1.4	Pump controller	4
1.5	Logic interface	4
1.6	Gas ballast control	4
2	Technical data	7
2.1	Operating and storage conditions	7
2.2	Performance	7
2.2.1	General	7
2.2.2	Pumping media	8
2.2.3	Performance characteristics	8
2.3	Mechanical data	11
2.3.1	General	11
2.3.2	Sound and vibration data	11
2.3.3	Construction	11
2.4	Electrical data	11
2.5	Logic interface data	12
2.6	LED indicators	14
3	Installation	15
3.1	Safety	15
3.2	System design considerations	15
3.3	Unpack and inspect	17
3.4	Position the pump	17
3.4.1	Mechanical fixing	17
3.5	Connect to the vacuum system	17
3.6	Electrical installation	18
3.6.1	Fuses and circuit breakers	18
3.6.2	Connection to your electrical supply	19
3.6.3	Disconnect the pump from your electrical supply	19
3.7	Connection for remote control and monitoring	19
3.7.1	Connect the logic interface to your control equipment	19
4	Operation	21
4.1	Operational modes	21
4.2	Manual operation	21
4.2.1	Start and stop	22
4.2.2	Standby	22
4.3	Parallel control and monitoring	23
4.4	Analogue speed control	24
4.4.1	Hardware configuration	25
4.4.2	Operation	25
4.5	Auto-run	26
4.6	Use of gas ballast control	26
4.6.1	Gas ballast control	26
4.7	Start up procedure	26
4.8	To achieve ultimate vacuum	27
4.9	To pump condensable vapours	27
4.10	Shut-Down	27

gea/0187/02/12

© Edwards Limited 2012. All rights reserved.
Edwards and the Edwards logo are trademarks of Edwards Limited.

Contents

5 Maintenance 29

5.1 Safety information 29
5.2 Maintenance plan 30
5.3 Inspect and clean the inlet strainer 30
5.4 Clean the external fan cover 30
5.5 Check the pump performance (service indicator) 30
5.6 Replace the tip-seals 31
5.7 Replace the pump bearings (service indicator) 31
5.8 Replace the pump controller (service indicator) 31
5.9 Electrical safety check 31
5.10 Service indicator codes 32
5.11 Fault finding 32
5.11.1 The pump has failed to start or has stopped 32
5.11.2 The pump has failed to achieve the required performance 32
5.11.3 The pump surface temperature is high 33
5.11.4 Alarm indicator codes 33

6 Storage and disposal 35

6.1 Storage 35
6.2 Disposal 35

7 Spares and accessories 37

7.1 Introduction 37
7.2 Accessories 37
7.2.1 Silencer 38
7.2.2 Gas ballast adaptor 38
7.2.3 Gas ballast adaptor blank 38
7.2.4 Vibration isolators 38
7.2.5 Inlet/exhaust filter 38
7.2.6 Exhaust nozzle 39
7.2.7 Chemical resistance conversion kit 39
7.2.8 Electrical cables 39
7.2.9 Pump-to-controller cable 39
7.3 Spares 40
7.3.1 Tip-seal kit 40
7.3.2 Cooling fan 40
7.3.3 Gas ballast knob 40
7.3.4 Silencer spares kit 40
7.3.5 Inlet/exhaust filter spares 40
7.3.6 Bearing replacement kit 41

For return of equipment, complete the HS Forms at the end of this manual.

© Edwards Limited 2012. All rights reserved.
Edwards and the Edwards logo are trademarks of Edwards Limited.

Illustrations

Figure — Page

1 nXDS scroll pump 3
2 Quick start guide (manual control mode) 5
3 nXDS6i Performance characteristics 9
4 nXDS10i Performance characteristics 9
5 nXDS15i Performance characteristics 10
6 nXDS20i Performance characteristics 10
7 LED indicators 14
8 Installation drawing 16
9 User interface panel 22
10 Logic interface connections - parallel control 23
11 Logic interface connections - analogue speed control 24
12 Analogue speed control 25
13 nXDS accessories 37

Tables

Table — Page

1 nXDS Control modes 6
2 Operating and storage conditions 7
3 Environmental conditions 7
4 General characteristics 7
5 Performance characteristics 8
6 General mechanical data 11
7 Sound and vibration data 11
8 Electrical ratings for continuous operation 11
9 Recommended fuses 11
10 Logic interface technical data 12
11 Logic interface connector pins 13
12 LED indicators 14
13 Maintenance plan 30
14 Flashing service codes 32
15 Flashing error codes 33
16 Silencer 38
17 Gas ballast adaptor 38
18 Gas ballast blank adaptor 38
19 Vibration isolators 38
20 Inlet/exhaust filter 38
21 Exhaust nozzle 39
22 Chemical resistance conversion kit 39
23 Electrical cables 39
24 Pump-to-controller cables 39
25 Tip-seal kit 40
26 Cooling fan 40
27 Gas ballast knob 40
28 Silencer spares kit 40
29 Inlet/exhaust filter spares 40
30 Bearing replacement kit 41

© Edwards Limited 2012. All rights reserved.
Edwards and the Edwards logo are trademarks of Edwards Limited.

Associated publications

Publication title	Publication number
Vacuum Pump and Vacuum System Safety	P400-40-100
nXDS Serial Comms Interface Instruction Manual	A735-01-860

© Edwards Limited 2012. All rights reserved.
Edwards and the Edwards logo are trademarks of Edwards Limited.

1 Introduction

1.1 Scope of this manual

This manual provides installation, operation and maintenance instructions for the Edwards nXDS series of Scroll Pumps. You must use your pump as specified in this manual. Read this manual before you attempt to install and operate your pump.

Important safety information is highlighted as WARNING and CAUTION instructions; you must obey these instructions. The use of WARNINGS and CAUTIONS is defined below.

WARNING

Warnings are given where failure to observe the instruction could result in injury or death to people.

CAUTION

Cautions are given where failure to observe the instruction could result in damage to the equipment, associated equipment and process.

Pressures are stated as absolute pressures unless otherwise stated.

The following IEC warning labels appear on the pump:

Warning – refer to accompanying documentation.

Warning – risk of electric shock.

Warning – hot surfaces.

© Edwards Limited 2012. All rights reserved.
Edwards and the Edwards logo are trademarks of Edwards Limited.

1.2 ATEX directive implication

This equipment is designed to meet the requirements of Group II Category 3 equipment in accordance with Directive 94/9/EC of the European Parliament and the Council of 23rd March 1994 on the approximation of the laws of the Member States concerning equipment and protective systems intended for use in potentially explosive atmospheres. (The ATEX Directive).

The ATEX Category 3 applies in respect of potential ignition sources internal to the equipment. An ATEX Category has not been assigned in respect of potential ignition sources on the outside of the equipment as the equipment has not been designed for use where there is an external potentially explosive atmosphere.

There is no potential source of ignition within the pump during normal operation but there may be potential sources of ignition under conditions of foreseeable and rare malfunction as defined in the Directive. Accordingly, although the pump is designed to pump flammable materials and mixtures, operating procedures should ensure that under all normal and reasonably foreseeable conditions, these materials and mixtures are not within explosive limits. Category 3 is considered appropriate for the avoidance of ignition in the case of a rare malfunction which allows flammable materials or mixtures to pass through the pump whilst within their explosive limits.

When flammable materials are present within the equipment you must:

- Not allow air to enter the equipment.
- Ensure the system is leak tight.

Further details can be obtained by contacting Edwards UK on +44 1293 528844.

© Edwards Limited 2012. All rights reserved.
Edwards and the Edwards logo are trademarks of Edwards Limited.

Figure 1 - nXDS scroll pump

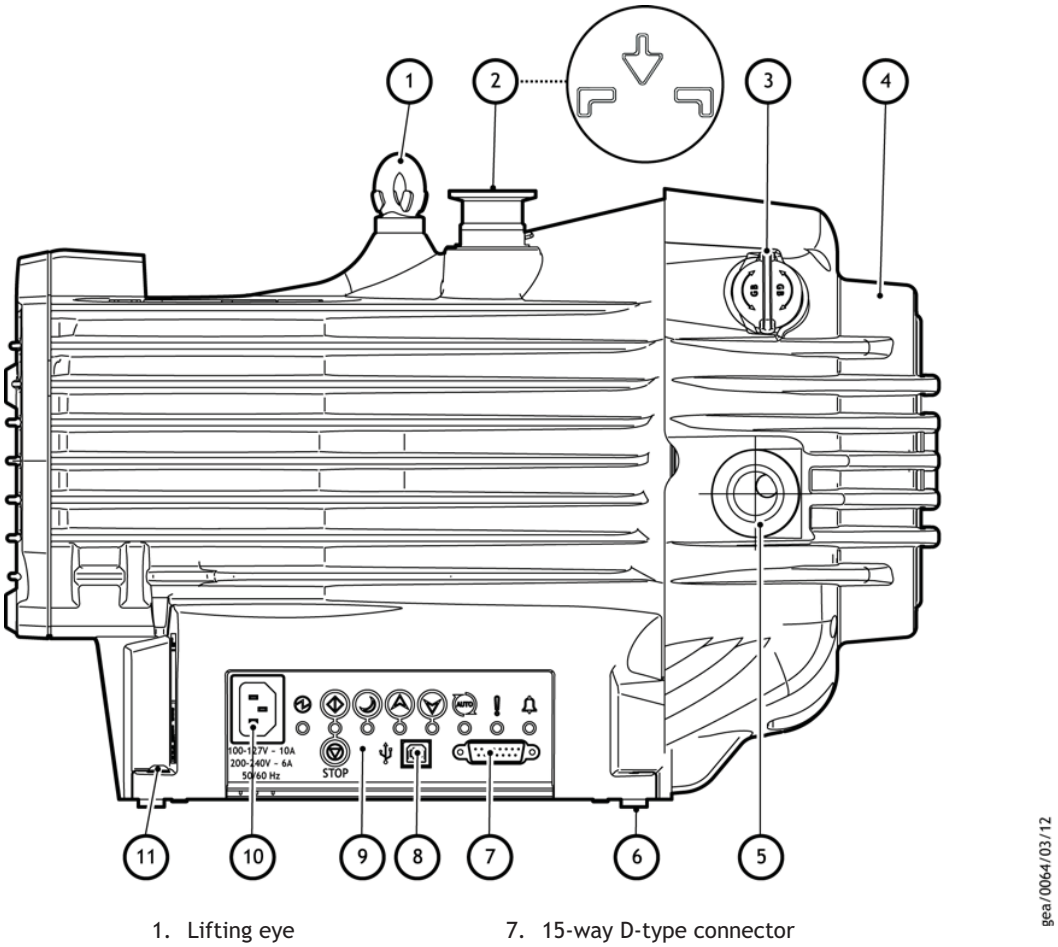

1. Lifting eye
2. NW25 inlet port
3. Gas ballast control
4. Cooling fan
5. NW25 exhaust port
6. Rubber feet
7. 15-way D-type connector
8. USB port (service mode only)
9. User interface panel
10. Mains power connector
11. Secondary earth bond point

1.3 General description

The nXDS pump is shown in Figure 1. Refer to Figure 1 for item numbers in brackets in the following descriptions.

The nXDS pump is a truly dry vacuum pump as all the bearings, with their hydrocarbon lubricant, are isolated from the vacuum space. The nXDS pump is suitable for use on vapour handling processes, and may be used for some pumping applications involving corrosive substances. For information on pumping flammable gases, contact Edwards.

The body of the pump includes a fixed scroll and an orbiting scroll. The orbiting scroll is controlled by an electric motor through an eccentric cam on the motor drive shaft. The movement of the orbiting scroll, meshed with the fixed scroll, forms successive crescent shaped volumes in the pump. Gas that enters the pump through the inlet is compressed by the movement of the orbiting scroll and swept towards the centre of the fixed scroll. The compressed gas enters the exhaust port near the centre of the fixed scroll and is exhausted from the pump through the outlet.

Refer to Section 2.1 for details of operating conditions.

© Edwards Limited 2012. All rights reserved.
Edwards and the Edwards logo are trademarks of Edwards Limited.

1.4 Pump controller

The integral pump controller manages the supply of current to a three-phase electric motor in accordance with operating conditions. The controller monitors power and temperature, and will protect the pump in the event of operation under sustained high load or under fault conditions.

The controller provides the user interface (refer to Figure 1). The pump may be operated in these modes:

- Manually, using the buttons on the interface panel. Refer to Figures 2 and 9.
- Remotely via serial communications or digital and analogue process control (parallel), via the 15-way D-type logic interface connector. Refer to Section 1.5.

1.5 Logic interface

The pump controller can be operated via the 15-way D-type logic interface connector. The signals on the logic interface are of the following types:

- Control inputs: these are switch-type and analogue signals that are used to control the pump
- Status outputs: these outputs identify the status of the system

The logic interface has been designed to support both serial control, parallel control and monitoring, operating though one connector. For serial control either RS232 or RS485 can be selected.

For Control Modes refer to Table 1.

For Logic interface data refer to Section 2.5.

1.6 Gas ballast control

To pump high vapour loads, gas ballast can be delivered into the pump to prevent condensation of the vapour carried by the pumped gases.

Air can be introduced to the low vacuum stages through the gas ballast control (Figure 1, item 3). Alternatively, an inert gas such as nitrogen can be supplied through a suitable external valve and by using the appropriate adaptor, available as an accessory. Refer to Section 7.

© Edwards Limited 2012. All rights reserved.
Edwards and the Edwards logo are trademarks of Edwards Limited.

Figure 2 - Quick start guide (manual control mode)

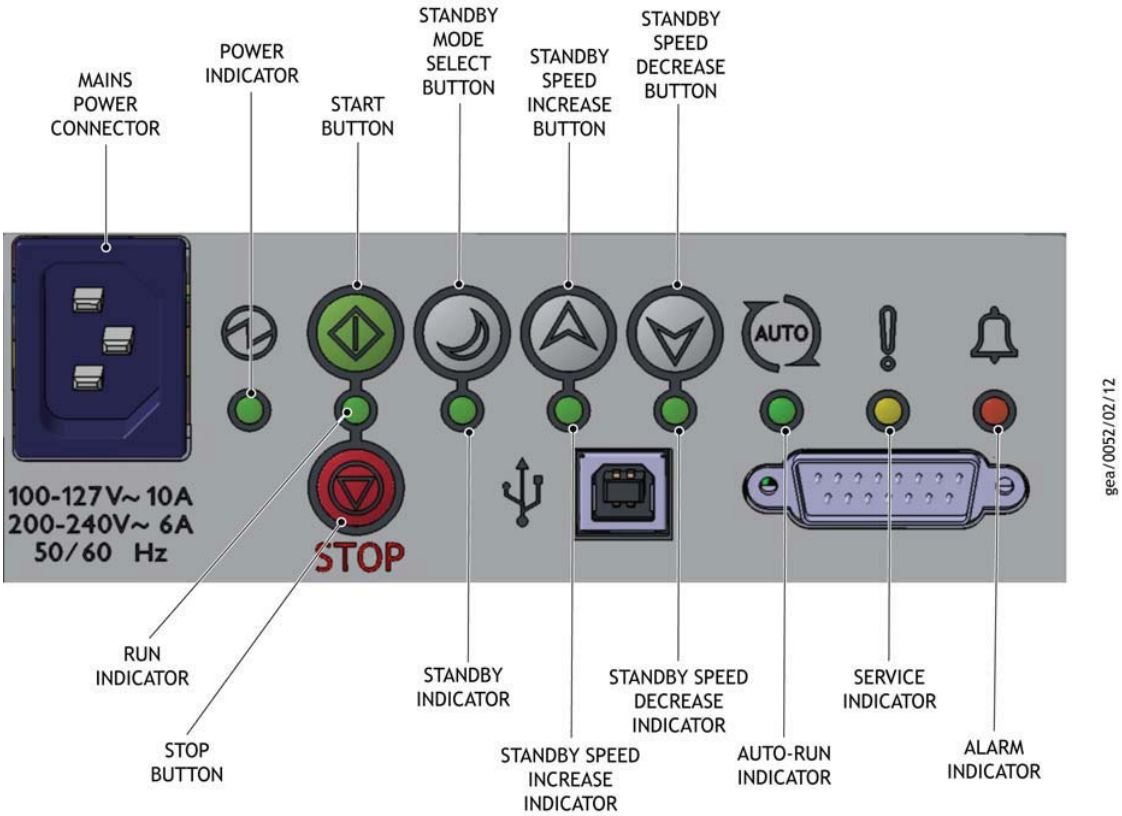

OPERATION	SELECT	STATUS	SECTION
Apply power	**MAINS POWER**	The pump will remain off (factory default). The **POWER INDICATOR** will illuminate.	3.6.2
Start the pump	**START BUTTON**	The pump will accelerate up to full running speed.* The **RUN INDICATOR** will flash while accelerating. The **RUN INDICATOR** will remain on when the pump reaches full speed.	4.2.1
Stop the pump	**STOP BUTTON**	The pump will decelerate and stop running. The **RUN INDICATOR** will flash while decelerating. The **RUN INDICATOR** will go off when the pump has stopped.	4.2.1
Select and deselect the standby speed	**STANDBY MODE SELECT BUTTON**	When engaged, the **STANDBY INDICATOR** will illuminate and the pump will run at the standby speed setting. Factory default is 70% of full speed.	4.2.2
Increase or decrease the pump speed when in standby mode	**STANDBY SPEED INCREASE BUTTON**	The pump speed will increase. The **INCREASE STANDBY INDICATOR** will remain illuminated when the pump reaches a maximum of 100% of full speed.	4.2.2
	STANDBY SPEED DECREASE BUTTON	The pump speed will decrease. The **DECREASE STANDBY INDICATOR** will remain illuminated when the pump reaches a minimum of 67% of full speed.	4.2.2
Select and deselect the Auto-run function	**START** or **STOP BUTTON** (>8 sec)	When engaged, the **AUTO-RUN INDICATOR** will illuminate. The pump will re-start automatically after the power has been restored.	4.5

* *The pump is set to 30Hz rotational full speed (factory default)*

© Edwards Limited 2012. All rights reserved.
Edwards and the Edwards logo are trademarks of Edwards Limited.

Table 1 - nXDS Control modes

Configuration	Control mode	Manual/Section
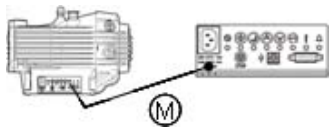	Manual control via nXDS user interface	Section 1 Figure 2 in this manual
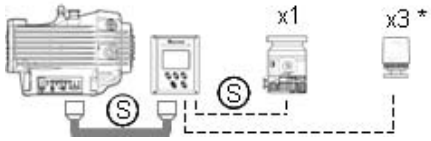	Serial control via (TIC) *Turbo Instrument Controller or Turbo Controller	Manual D397-22-880
	Parallel control via (TAG) Turbo & Active Gauge Controller	Manual D395-92-880
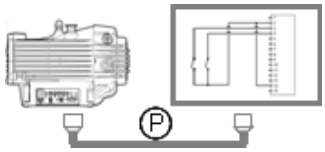	Parallel control via Digital I/O e.g. PLC control	Section 1.4 in this manual
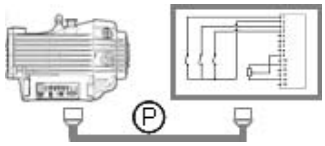	Parallel control via Digital I/O and Analogue speed control source	Section 4.4 Figure 11
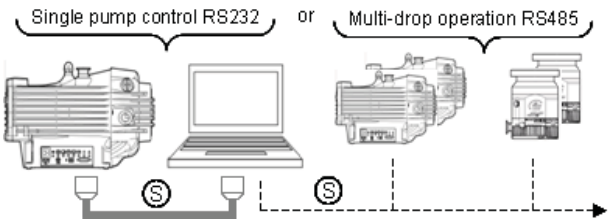	Serial control via RS232 or RS485 Comms Interface	Manual A735-01-860

Ⓜ Manual control

Ⓟ Parallel control

Ⓢ Serial control

Note: *Table 1 shows additional Edwards products, such as DX / nEXT Turbo pumps and Active Gauges that can be controlled at the same time using the various control methods displayed above.*

© Edwards Limited 2012. All rights reserved.
Edwards and the Edwards logo are trademarks of Edwards Limited.

2 Technical data

WARNING

If the nXDS pump is operated outside the specified limits, the pump housing may become hot.

2.1 Operating and storage conditions

Table 2 - Operating and storage conditions

Operating and storage conditions	nXDS
Ambient temperature range (storage)	-30 °C to +70 °C
Ambient temperature range (operation)	+5 °C to +40 °C
Maximum humidity (storage in original packaging)	≤ 95% RH
Maximum humidity (operation)	90% RH

Table 3 - Environmental conditions

Environmental conditions	
Pollution	Pollution degree 2
Installation	Installation category II
Altitude restriction	Max 3000 m
Area of use	Indoor use

2.2 Performance

2.2.1 General

Table 4 - General characteristics

Description	nXDS6i	nXDS10i	nXDS15i	nXDS20i
Peak pumping speed (m^3h^{-1})	6.2	11.4	15.1	22.0
Maximum permitted continuous inlet pressure (mbar)*	200	200	200	50
Maximum permitted exhaust pressure (bar gauge)†	1	1	1	1
Maximum permitted gas ballast inlet pressure (bar gauge)	0.5	0.5	0.5	0.5
Maximum recommended chamber volume to pump down from atmospheric pressure (litres)‡	25	50	75	75
Maximum pressure rise when stopped, with no inlet or gas ballast flow (mbar)	7	7	7	7
Leak tightness (mbar ls^{-1})	1×10^{-6}	1×10^{-6}	1×10^{-6}	1×10^{-6}

* *These pumps are designed to pump down from atmospheric pressure, but prolonged operation at inlet pressures higher than specified may reduce bearing life.*

† *These pumps are intended to exhaust to atmospheric pressure. High exhaust pressure may reduce tip-seal life.*

‡ *Larger volumes may be pumped, but prolonged operation at inlet pressures higher than specified may reduce bearing life. The nXDS20i is optimised for constant throughput and is not recommended for cyclic duty.*

Note: *If the pump is operated outside the specified limits, then the pump housing may become hot; the controller may reduce the motor speed; and tip seal wear rate will be increased.*

© Edwards Limited 2012. All rights reserved.
Edwards and the Edwards logo are trademarks of Edwards Limited.

2.2.2 Pumping media

WARNING

Do not use the nXDS pump to pump pyrophoric or explosive gas mixtures.

The pump is designed to pump the following gases:

- Air
- Carbon dioxide
- Helium
- Carbon monoxide
- Nitrogen
- Argon

You can use the pump to pump water vapour, caution must be taken to ensure that vapour does not condense inside the pump. Refer to Section 4.6.1 on how to prevent condensation of water vapour in the pump.

If you wish to pump a vapour or gas not in the list above, contact Edwards for advice.

2.2.3 Performance characteristics

The position of the gas ballast control defines the performance characteristics of the pump. These performance characteristics are listed in Table 5.

Table 5 - Performance characteristics

Description		nXDS6i	nXDS10i	nXDS15i	nXDS20i
Pump ultimate (mbar)	Gas ballast position 0	2×10^{-2}	7×10^{-3}	7×10^{-3}	3×10^{-2}
	Gas ballast position 1	5×10^{-2}	4×10^{-2}	4×10^{-2}	6×10^{-2}
Gas ballast flow ($l\ min^{-1}$)	Gas ballast position 1	12	16	31	24

© Edwards Limited 2012. All rights reserved.
Edwards and the Edwards logo are trademarks of Edwards Limited.

Figure 3 - nXDS6i Performance characteristics

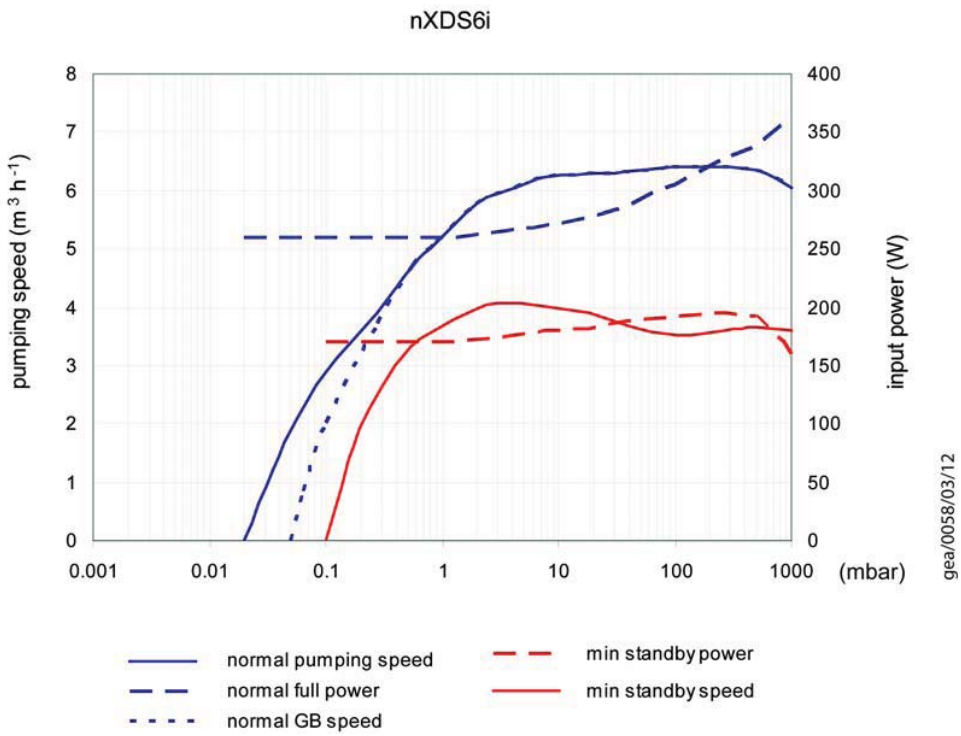

Figure 4 - nXDS10i Performance characteristics

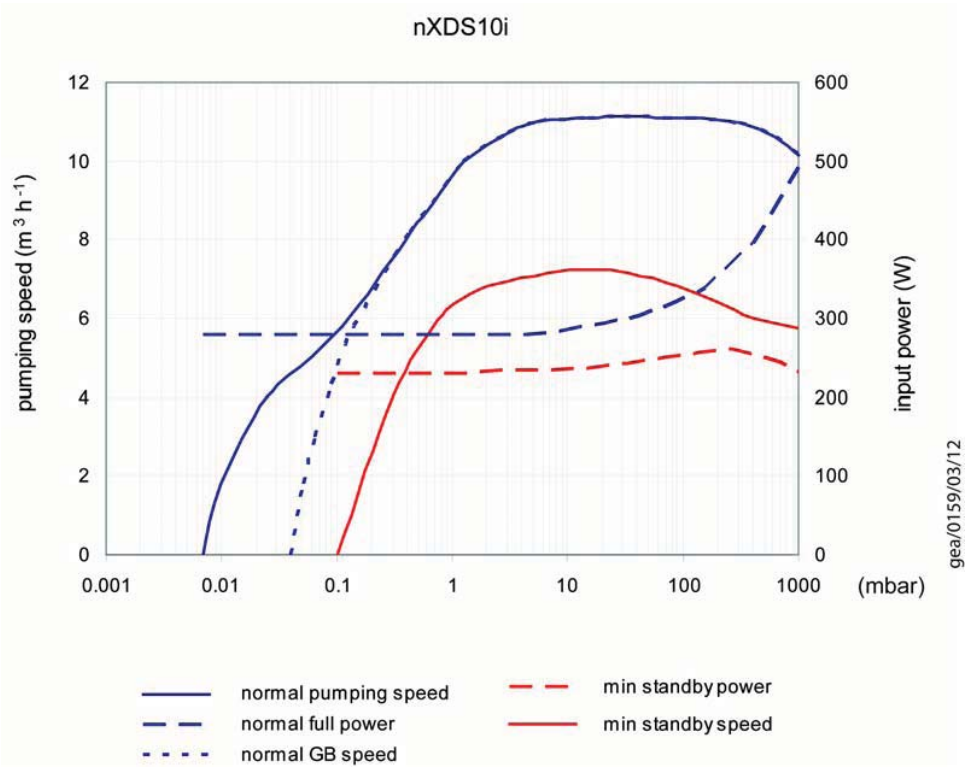

© Edwards Limited 2012. All rights reserved.
Edwards and the Edwards logo are trademarks of Edwards Limited.

Figure 5 - nXDS15i Performance characteristics

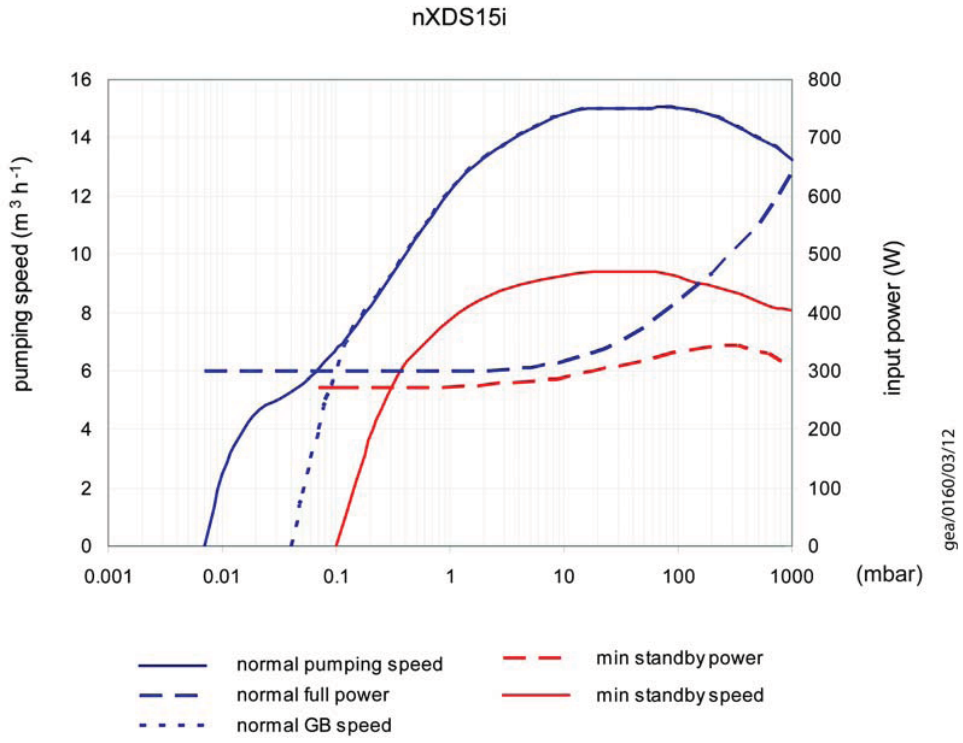

Figure 6 - nXDS20i Performance characteristics

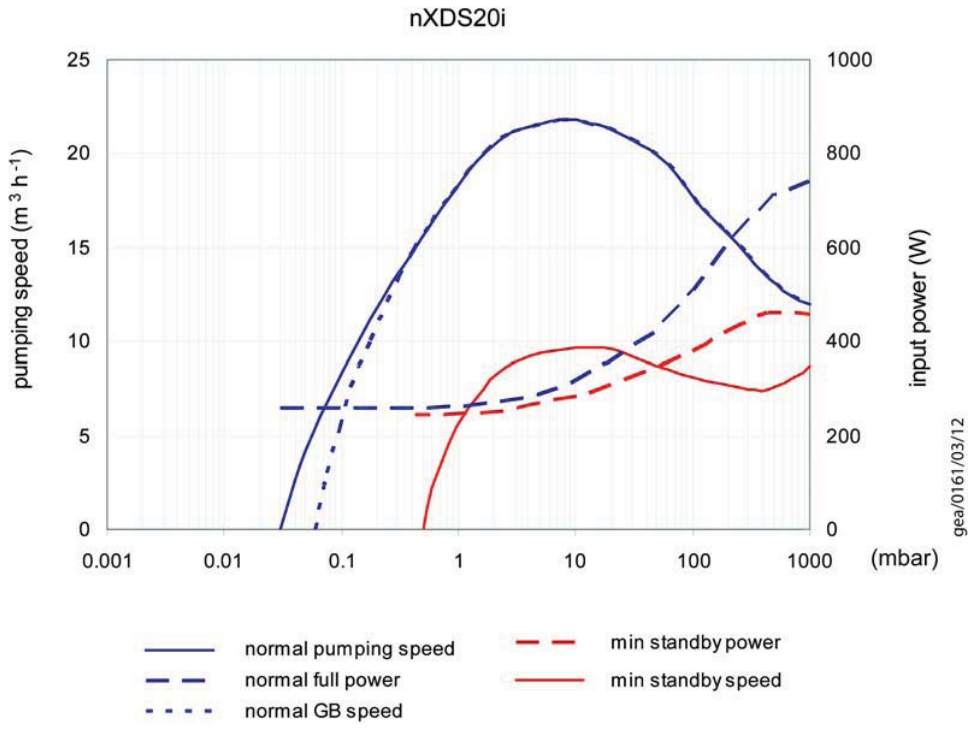

© Edwards Limited 2012. All rights reserved.
Edwards and the Edwards logo are trademarks of Edwards Limited.

2.3 Mechanical data

2.3.1 General

Table 6 - General mechanical data

Parameter	nXDS
Overall dimensions (L x W x H)	432 x 282 x 302 mm
Maximum tilt angle	10 degrees
Nominal rotational speed	1800 rpm (30 Hz)
Mass (maximum)	6i - 26.2 kg 10i - 25.8 kg 15i - 25.2 kg 20i - 25.6 kg
Inlet connection	NW25
Outlet connection	NW25

2.3.2 Sound and vibration data

Table 7 - Sound and vibration data

Parameter	nXDS
Sound pressure, measured at ultimate vacuum 1 metre from the end of the pump to ISO 3744	52.0 dB (A) ± 2.5 Declared dual number noise emission values according with ISO 4871
Vibration: measured at the inlet port (ISO 3744)	Class 1C...< 4.5 mms^{-1} (rms radial)

2.3.3 Construction

All surfaces of the pump which are exposed to the pumped gases are free from copper, zinc and cadmium. Exposed components include: anodised aluminium scrolls, aluminium housing, nickel-plated inlet and exhaust ports, PTFE composite tip-seals, various stainless steel parts and fluorocarbon elastomer seals.

Other materials of construction include steel, copper, hydrocarbon lubricant and chemically resistant polymers.

2.4 Electrical data

Table 8 - Electrical ratings for continuous operation

Pump	Supply (Vac rms)	Phase	Frequency (Hz)	Input current (A rms)
All variants	100 - 127 ± 10%	Single	50 - 60	10
	200 - 240 ± 10%	Single	50 - 60	6

Table 9 - Recommended fuses

Area	Voltage	Rating
UK	230 V	10 A, 250 Vac rms
Europe	230 V	10 A, 250 Vac rms
US	110 V	13 A, 250 Vac rms
Japan	100 V	13 A, 250 Vac rms

Note: *Time-lag fuses should be used, as current transients can exceed the rated values.*

© Edwards Limited 2012. All rights reserved.
Edwards and the Edwards logo are trademarks of Edwards Limited.

2.5 Logic interface data

nXDS pumps have a 15-way D-type logic interface connector located on the user interface panel (Figure 1, item 7). The logic interface connector can be plugged directly into the Edwards 200W TIC Turbo Instrument Controller or Turbo Controller, or TAG Turbo & Active Gauge Controller. You must use a suitable connector mating half (not supplied) to connect the nXDS pump to your own control system. Refer to Table 10 for the interface technical data and Table 11 for the logic interface pins for the electrical connections.

Table 10 - Logic interface technical data

Logic interface description	
Connector*	15-way D-type (male)
Start, serial enable and remote enable:	
Enable control voltage: low (closed)	0 to 0.8 V d.c. (I_{OUT} = 0.55 mA nominal)
Disable control voltage: high (open)	4 to 26.4 V d.c. (Internal pull up to 6.4 V nominal)
Standby control input:	
Enable control voltage: low (closed)	0 to 0.8 V d.c. (I_{OUT} = 0.3 mA nominal)
Disable control voltage: high (open)	4 to 26.4 V d.c. (Internal pull up to 3.2 V nominal)
Analogue and RS485 enable control inputs:	
Enable control voltage: low (closed)	0 to 0.8 V d.c. (I_{OUT} = 0.55 mA nominal)
Disable control voltage: high (open)	4 to 52.8 V d.c. (Internal pull up to 6.4 V nominal)
Analogue speed input	0 to 10 V d.c. directly proportional to the motor speed e.g. 0 V = 0 Hz, 10 V = 30 Hz
Voltage accuracy	± 5% full scale
NORMAL status output:	
Type	Open collector transistor plus pull up resistor.
< Normal speed (default 80%)	OFF (4.7 k pull up + diode to 12 V d.c.)
≥ Normal speed	ON (< 0.8 V d.c. sinking 10 mA)
Maximum current rating	10 mA
Maximum voltage rating	28.8 V d.c.
FAIL status output:	
Type	Open collector transistor plus pull up resistor.
Fail	OFF (4.7 k pull up + diode to 12 V d.c.)
OK	ON (< 0.8 V d.c. sinking 10 mA)
Maximum current rating	10 mA
Maximum voltage rating	28.8 V d.c.
Analogue 10 V reference	+ 10 V d.c. analogue voltage reference Unipolar output with diode protection
Voltage accuracy	± 2% full scale
Output current	≤ 5 mA for specified accuracy

* *Mating half of connector not supplied*

© Edwards Limited 2012. All rights reserved.
Edwards and the Edwards logo are trademarks of Edwards Limited.

Table 11 - Logic interface connector pins

Pin Number	Signal	Polarity	Use
1	Analogue Speed Enable-control Input	-	Connect to Pin 2 (0 V) to enable analogue speed control via Pin 9.
2	0 V Control Reference	-	0 V reference for ALL control and status signals listed within this table.
3	START / STOP - Control Input	-	Connect to Pin 2 (0 V) to START the nXDS pump system.
4	STANDBY - Control Input / Serial-RX / RS-485 A-	-	Connect to Pin 2 (0 V) to enable STANDBY speed when the SERIAL ENABLE control input is inactive.
5	Serial Enable - Control Input	-	Connect to Pin 2 (0 V) to enable serial communications.
6	RS-232 / RS-485 - Control Input	-	Default configuration is RS-232 with Pin 6 unconnected. Connect to Pin 2 (0 V) to enable RS-485 serial communications.
7	FAIL - Status Output / Serial-TX / RS-485 B+	-	Logic HIGH when a fail / fault condition exists and the SERIAL ENABLE control input is inactive.
8	0 V Control Reference	-	0 V reference for ALL control and status signals listed within this table.
9	Analogue Speed - Control Input	-	0-10 V Analogue Input: 0 V = 0% Speed; +10 V = 100% Speed
10	Chassis / Screen	-	Screen
11	+10 V Analogue Reference - Control Output	Positive	+10 V analogue voltage reference output: 5 mA; uni-polar output, diode protected.
12	Chassis / Screen	-	Screen
13	Not Connected	-	Unused control pin.
14	REMOTE - Control Input	-	Connect to Pin 2 (0 V) to enable remote control via Parallel or Serial control modes.
15	NORMAL - Status output	-	Logic LOW when the pump rotational speed is at normal speed or above.

© Edwards Limited 2012. All rights reserved.
Edwards and the Edwards logo are trademarks of Edwards Limited.

2.6 LED indicators

Figure 7 - LED indicators

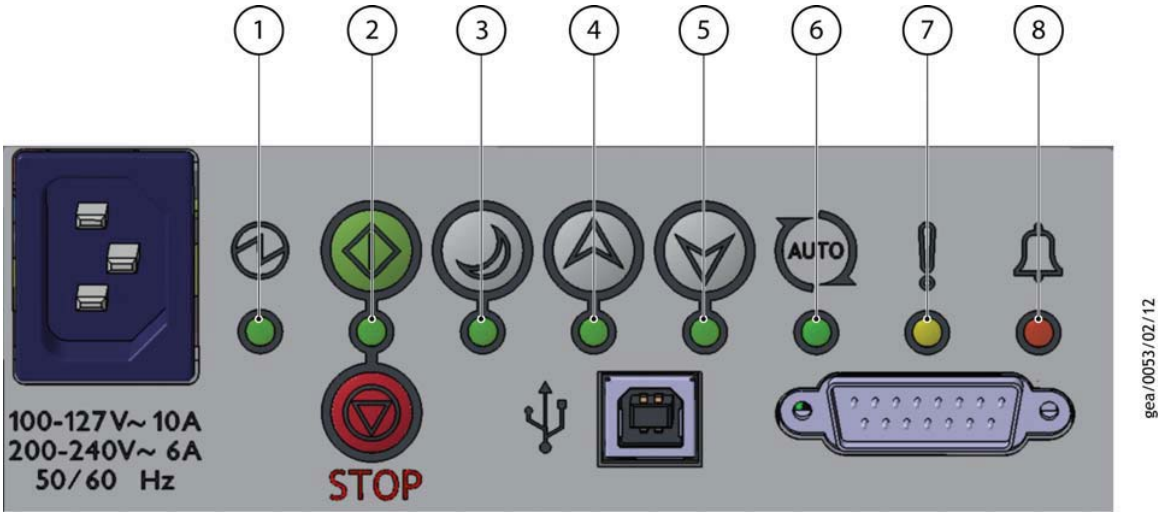

The nXDS pump has eight indicator LED's

Table 12 - LED indicators

LED	Description	Details
1	Power indicator	Indicates that electrical mains supply to the pump is ON
2	Run indicator	Indicates that the pump is running. Refer to Section 4.2.1.
3	Standby mode indicator	Indicates that the Standby mode has been selected. Refer to Section 4.2.2.
4	Standby speed increase indicator	The indicator will blink with every short push of the Standby speed increase button. The indicator will remain ON when maximum standby speed has been reached. Refer to Section 4.2.2.
5	Standby speed decrease indicator	The indicator will blink with every short push of the Standby speed decrease button. The indicator will remain ON when minimum standby speed has been reached. Refer to Section 4.2.2.
6	Auto-run indicator	Indicates that the Auto-run mode has been selected. Refer to Section 4.3.
7	Service indicator	Indicates that a service interval has been reached. Refer to Section 5.10.
8	Alarm indicator	Indicates an Alarm has been triggered. Refer to Section 5.11.4.

© Edwards Limited 2012. All rights reserved.
Edwards and the Edwards logo are trademarks of Edwards Limited.

3 Installation

3.1 Safety

WARNING

Obey the safety instructions given below and take note of appropriate precautions. If you do not, you can cause injury to people and damage to equipment.

Prevent any part of the human body coming into contact with the vacuum.

The Edwards nXDS pump is not recommended for pumping explosive gases or hazardous substances.

You must ensure that the nXDS pump is suitable for your application. If you have any doubt about its suitability, refer to the Edwards guidelines on vacuum pump and vacuum system safety (see associated publications at the end of the contents list at the front of this manual).

A suitably trained and supervised technician must perform the installation of the nXDS pump. Obey the safety instructions listed below, especially when you connect the pump into an existing system. Details of the specific safety precautions are given at the appropriate point in the instructions.

- Wear the appropriate safety clothing when you come into contact with contaminated components. Dismantle and clean contaminated components inside a fume cupboard.
- Vent and purge your vacuum system before you start installation work.
- Ensure that the installation technician is familiar with the safety procedures that relate to the products handled by the pumping system.
- Disconnect the other components in the pumping system from the electrical supply so that they cannot be operated accidentally.

3.2 System design considerations

Consider the following points when you design your pumping system:

Use a suitable valve to isolate the pump from your vacuum system if you need to allow the pump to warm up before pumping condensable vapours or if you need to maintain vacuum when the pump is switched off.

Avoid high levels of heat input into the pump from the process gases, otherwise the pump may overheat, and cause the thermal protection system to operate.

Make sure that the exhaust pipeline cannot become blocked. If you have an exhaust isolation valve, make sure that you cannot operate the pump with the valve closed. Refer to Section 3.5.

Provide for a purge of inert gas when you shut down the pumping system, to dilute dangerous gases to safe concentrations.

© Edwards Limited 2012. All rights reserved.
Edwards and the Edwards logo are trademarks of Edwards Limited.

Figure 8 - Installation drawing

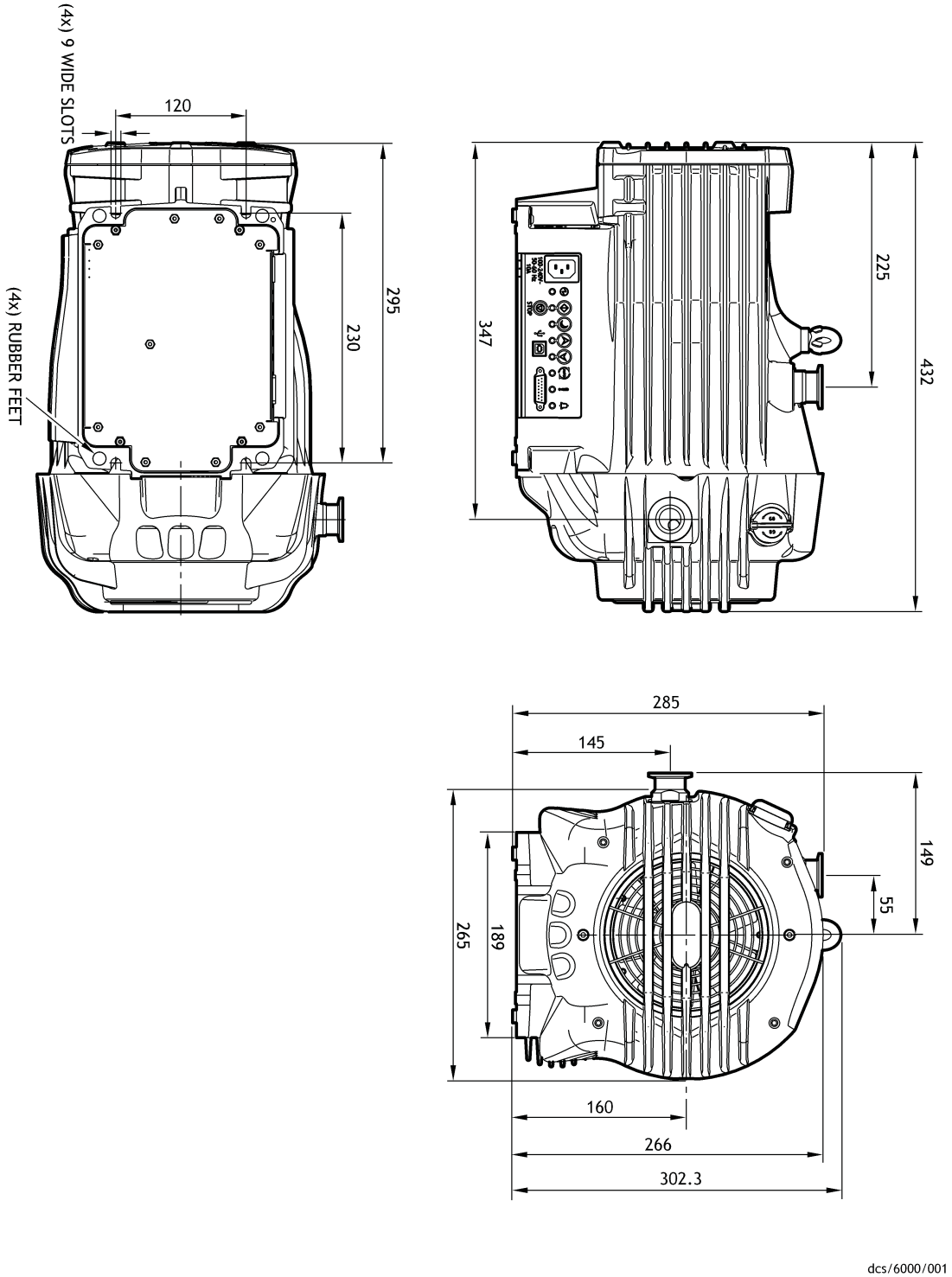

Note: *All dimensions in mm. External dimensions are the same for all variants.*

© Edwards Limited 2012. All rights reserved.
Edwards and the Edwards logo are trademarks of Edwards Limited.

3.3 Unpack and inspect

WARNING

Use suitable lifting equipment to move the nXDS pump. The maximum pump mass is 27 kg.

- **Mechanical lifting equipment should be attached to the lifting eye; loose slings should not be used.**
- **Take care when moving the pump into position. Its mass may make it difficult to slide. The fan cowl is shaped to provide a handhold for positioning; the pump must not be lifted using this handhold.**

Remove all packing materials, remove the pump from its packing box, remove the protective covers from the inlet and outlet ports and inspect the pump. If the pump is damaged, notify your supplier and the carrier in writing; state the item number of the pump together with your order number and your supplier's invoice number. Retain all the packing materials for inspection. Do not use the pump if it is damaged. If the pump is not to be used immediately, replace the protective covers. Store the pump in suitable conditions, as described in Section 6.1. Refer to Section 6.2 for disposal of materials.

3.4 Position the pump

WARNING

If the pump is to be used on the floor of a work area, position the power lead and the exhaust and inlet hoses with care. Ensure that personnel in the area are aware of any obstructions around the pump.

Provide a firm, level platform for the pump. Locate the pump so that the gas ballast control and the user controls are accessible.

If your pump will be located inside an enclosure, make sure that there is adequate ventilation at both ends of the pump, so that the ambient temperature around the pump does not exceed 40 °C. There must be a minimum space of 25 mm between the pump and the enclosure walls.

3.4.1 Mechanical fixing

Note: *If you wish to secure the pump you may do so using the four holes located on each corner of the pump base, we recommend you use M8 bolts.*

3.5 Connect to the vacuum system

WARNING

If pumping dangerous gases or vapours, connect the exhaust to a suitable treatment plant to prevent the discharge of dangerous gases and vapours to the surrounding atmosphere.

If the pump is operated with the exhaust line blocked, high pressure may be generated in the exhaust line pipework.

Refer to Figure 1. Before you connect the pump to your vacuum system, remove the plastic cap from the inlet and the exhaust, and ensure that the inlet strainer is fitted to the pump inlet port. Use appropriate NW25 vacuum fittings for connection to your system.

© Edwards Limited 2012. All rights reserved.
Edwards and the Edwards logo are trademarks of Edwards Limited.

Take note of the following information when you connect the pump to your vacuum system.

- To minimise noise and exhaust emissions, it is recommended that the pump is connected to an exhaust line or a silencer (refer to Section 7).
- For optimum pumping speeds, ensure that the pipeline connected to the pump inlet is as short as possible and has a suitable internal diameter.
- Support the vacuum pipeline to prevent loading of the coupling joints.
- If the pump is operated with the exhaust line blocked, a pressure of 3 bar(g) may be generated in the exhaust pipework. Connect the pump using appropriate pipework and fittings.
- If necessary, incorporate flexible bellows in your system pipelines to reduce the transmission of vibration and to prevent loading of the coupling joints. If you use flexible bellows, you must ensure that you use bellows that have a maximum pressure rating which is greater than the highest pressure that can be generated in your system. We recommend that you use Edwards bellows.
- Incorporate an inlet isolation valve in the pipeline from the vacuum system to the pump, so that you can isolate the vacuum system from the pump when it is switched off and prevent the suckback of process gases and debris into the vacuum system.
- Ensure that the sealing surfaces are clean and scratch-free.

We recommend that you use an exhaust extraction system suitable for use with all of the process gases you will pump. Ensure that the exhaust extraction system cannot become blocked or obstructed when the pump is operating.

A small amount of tip seal wear product may collect in the exhaust duct of the pump. The dust may be blown out with the initial burst of air after the pump has been vented. This is quite common and the amount of dust seen will reduce over time.

After you have installed the nXDS pump, leak test the system and seal any leaks found.

3.6 Electrical installation

3.6.1 Fuses and circuit breakers

WARNING

Ensure that the electrical installation of the nXDS pump conforms with your local and national safety requirements. It must be connected to a suitably fused and protected electrical supply with a suitable earth point.

CAUTION

When locating the pump, ensure that access to the pump electrical supply cable is not obstructed.

If using an overload circuit breaker it must be of a time lag type.

If using an earth leakage device e.g. an RCD, use at least a 30 mA rated unit to avoid trip during start up.

The live conductor is fused inside the pump controller, but the neutral conductor is not fused; an external RCD should be installed to guard against damage in the event of a short-circuit between neutral and earth.

For recommended fuse ratings, refer to Table 9 in Section 2.4.

© Edwards Limited 2012. All rights reserved.
Edwards and the Edwards logo are trademarks of Edwards Limited.

3.6.2 Connection to your electrical supply

Make the electrical connection to the pump with an IEC60320 connector (C13) and cable that satisfies your local electrical standards. The nXDS pump must be earthed via the earth conductor of the IEC60320 connector.

We recommend that you fit a separate earth to the nXDS pump using an un-insulated braid or a separate insulated green/yellow conductor. The conductor must be a minimum of 14 AWG. Use the M5 x 10 screw and shake proof washer located on the rear of the pump housing (refer to Figure 1) to secure the earth conductor to the pump.

3.6.3 Disconnect the pump from your electrical supply

Before removing the physical electrical supply connection to the pump, via the IEC60320 cable (C13), isolate the Mains supply (refer to Figure 1).

3.7 Connection for remote control and monitoring

To operate the nXDS pump using parallel or serial control, you must use the 15-way D type connector on the user interface panel (refer to Figure 1, item 7). Refer to Table 11 for full details of the logic interface pins.

3.7.1 Connect the logic interface to your control equipment

You can control the nXDS pump using a hardware parallel control interface and/or via commands sent over a serial interface.

If you wish to control the nXDS pump using the hardware parallel interface, refer to Section 4.3 for more information. If you wish to use the serial interface or to work with a mixture of parallel and serial control, refer to manual A735-01-860.

© Edwards Limited 2012. All rights reserved.
Edwards and the Edwards logo are trademarks of Edwards Limited.

This page has been intentionally left blank.

© Edwards Limited 2012. All rights reserved.
Edwards and the Edwards logo are trademarks of Edwards Limited.

4 Operation

WARNING

Ensure that your system design does not allow the exhaust pipeline to become blocked.

CAUTION

A fine dust may be emitted from the exhaust of the scroll pump during start up, particularly when the pump is new or if new tip seals are fitted.

4.1 Operational modes

The nXDS pump implements three control modes:

- Manual Control Mode - using buttons on user interface panel
- Parallel Control Mode - via 15-way D-type logic interface connector on user interface panel
- Serial Control Mode (including Serial Interlock) - via 15-way D-type logic interface connector on user interface panel

The Control Mode is determined by the way the pump is started. Once started, the pump can only be stopped by the mode in which it was started, unless the power is cycled by isolation from the electrical supply.

4.2 Manual operation

The pump control functions of the user interface panel are detailed in Figure 9.

© Edwards Limited 2012. All rights reserved.
Edwards and the Edwards logo are trademarks of Edwards Limited.

Figure 9 - User interface panel

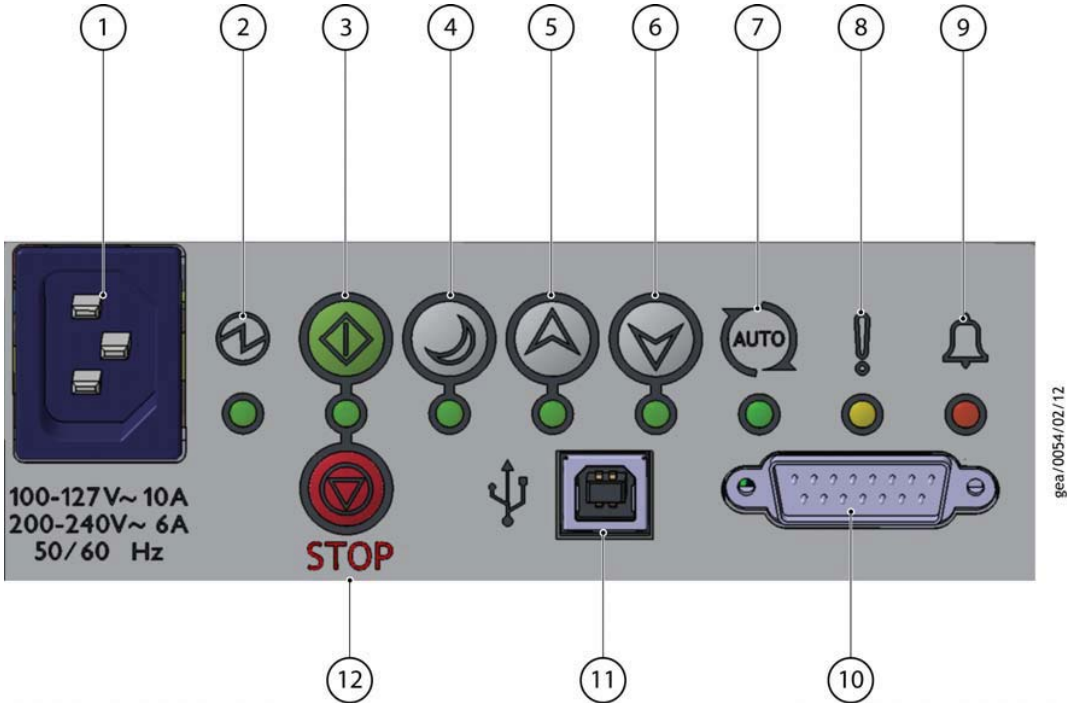

1. Mains power connector
2. Power connected indicator
3. Start button with indicator
4. Standby button with indicator
5. Increase standby speed button with indicator
6. Decrease standby speed button with indicator
7. Auto-run enabled indicator
8. Service indicator
9. Alarm indicator
10. 15-way D-type connector
11. USB port (Service mode only)
12. Stop button

4.2.1 Start and stop

Use the buttons (Figure 9, items 3 and 12) to start and stop the pump. Note that the stop command does not isolate the pump from the electrical supply.

4.2.2 Standby

Operation at reduced speed will further improve tip seal and bearing service life. Vacuum performance will be reduced when operating at standby speed.

Press the Standby button to select standby mode. The pump will initially run at factory default standby speed (70% of full speed). The speed can be adjusted using the increase and decrease standby speed buttons. The maximum standby speed is 100% of the default run speed and the minimum standby speed is 67% of the default run speed. A single short push will change the speed by 1% of the default run speed, holding the button will change the speed by 1%/sec. Once adjusted, the pump will return to this new user-defined speed each time standby speed is selected.

To return to normal run speed, you must press the Standby button.

© Edwards Limited 2012. All rights reserved.
Edwards and the Edwards logo are trademarks of Edwards Limited.

4.3 Parallel control and monitoring

Figure 10 - Logic interface connections - parallel control

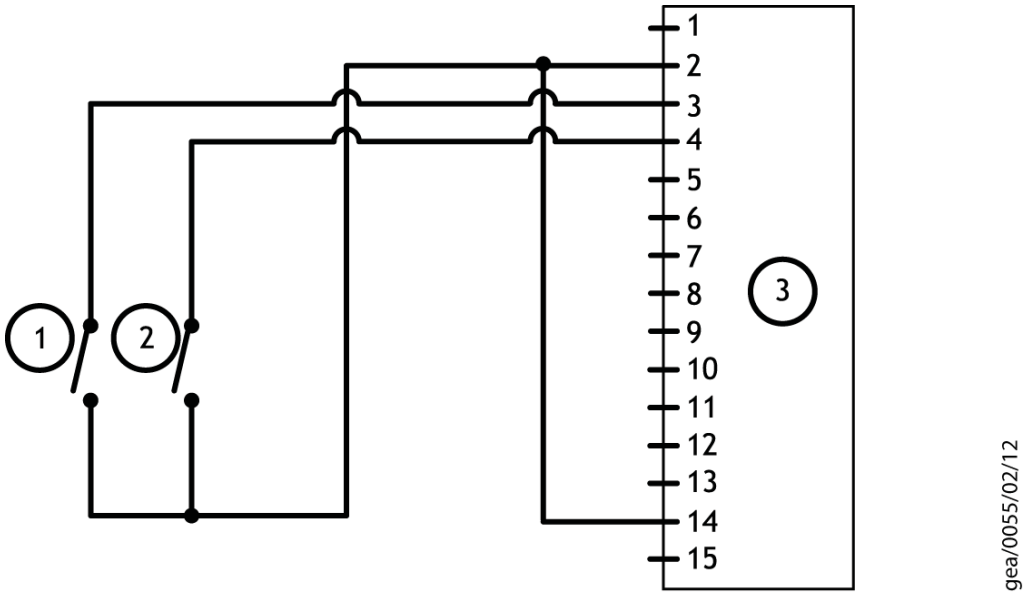

1. Start switch
2. Standby switch (optional)
3. nXDS pump logic interface

CAUTION

If you use the normal and fail lines to drive the coils of d.c. relays you must include a back EMF suppression diode in parallel with each relay coil to protect the nXDS pump.

Connect your control equipment to the control input pins of your logic interface mating half. Refer to Table 11, which identifies the logic interface connector pins. The control inputs are as follows:

- Start
- Standby speed
- Analogue speed

To activate any of these control inputs, you must connect the relevant control input (pin14) to the 0 V control reference.

To monitor the normal status output, connect your control equipment to the Normal status output (pin 15) and to pin 2 of your logic interface mating half. You can use the output to control other devices in your pumping system. The output can drive a low power relay of up to 24 V coil rating (up to 10 mA).

To monitor the fail status output, connect your control equipment to the fail output (pin 7) and to pin 2 of your logic interface mating half. You can use the output to control other devices in your pumping system. The output can drive a low power relay of up to 24 V coil rating (up to 10 mA).

© Edwards Limited 2012. All rights reserved.
Edwards and the Edwards logo are trademarks of Edwards Limited.

4.4 Analogue speed control

The Analogue Speed input is a process control source which enables the nXDS Scroll pump to run at variable operating speeds. This speed control source is an alternative to standby speed control.

Figure 11 - Logic interface connections - analogue speed control

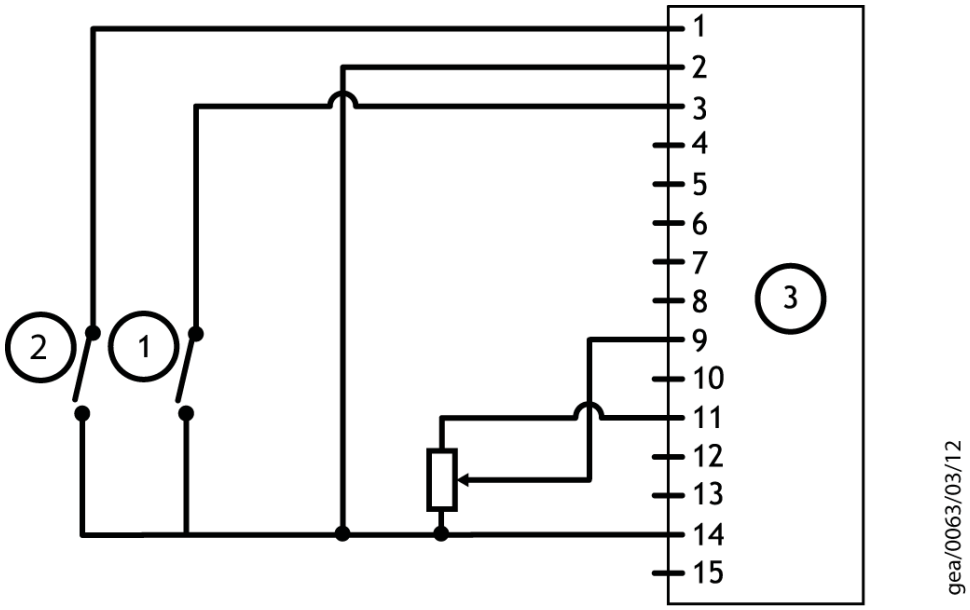

1. Start switch
2. Analogue control switch
3. nXDS pump logic interface

Note: *0.1 V ≡ 1% of Default Run Speed*

© Edwards Limited 2012. All rights reserved.
Edwards and the Edwards logo are trademarks of Edwards Limited.

Figure 12 - Analogue speed control

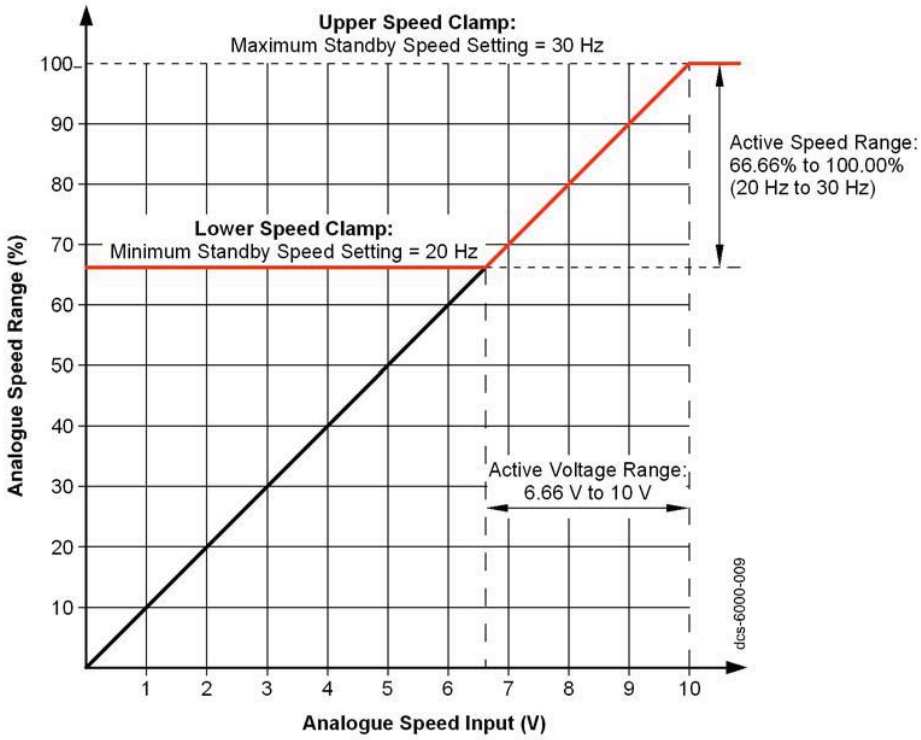

Note: *Voltages below 6.7 V will result in a clamped speed of 67% of full speed.*

4.4.1 Hardware configuration

Using the 15-way D-type Connector (Figure 1, item 7) apply the following signal configurations to enable the Analogue Speed Control source (refer to Table 11):

Connect the Analogue Speed Enable control input (pin 1) to the 0 V Control Reference (pin 2).

Connect a suitably calibrated analogue voltage source (0 to +10 V) e.g. (DAC) to the analogue speed control input (pin 9). Alternatively connect the output of a potentiometer referenced to the nXDS reference voltage (pin 11) to the analogue speed control input (pin 9). Refer to Figure 11. The 0 V rail of the external voltage source MUST be connected to the 0 V Control Reference (pin 2) of the nXDS pump-controller.

4.4.2 Operation

- A +10V input equates to a mechanical running speed which is equal to: 100% of the default run speed, i.e. 30 Hz.
- The minimum running speed provided by the Analogue Speed control source, is clamped at the minimum Standby Speed Setting, i.e. ~67% of the default run speed (20 Hz).
- The maximum running speed provided by the Analogue Speed control source, is clamped by the maximum Standby Speed Setting, i.e. 100% of the default run speed (30 Hz).

© Edwards Limited 2012. All rights reserved.
Edwards and the Edwards logo are trademarks of Edwards Limited.

4.5 Auto-run

The auto-run setting configures the pump to start at power-up without any customer intervention. This parameter is customer configurable via serial communications, or using the START / STOP buttons. Holding down either the START or STOP button, for more than eight seconds, will enable or disable the auto-run setting. The status of the auto-run setting is visible via the auto-run LED.

The pump can be stopped using either manual, parallel or serial control modes whilst in auto-run.

4.6 Use of gas ballast control

You can use the gas ballast control to optimise the performance of the scroll pump for your application. The performance characteristics of the pump with gas ballast on are shown in Section 2.2.3. You can change the position of the gas ballast control when the pump is off or when the pump is operating.

4.6.1 Gas ballast control

Use the gas ballast control to introduce air into the final stage of the pump. Use of gas ballast will reduce the condensation of vapours in the pump; the condensates would contaminate the pump.

There are only two positions, 0 and 1. The gas ballast control knob will rotate 360° in either direction at 90° intervals.

Gas ballast OFF (position 0). Use this setting to:

- achieve ultimate vacuum
- pump dry gases.

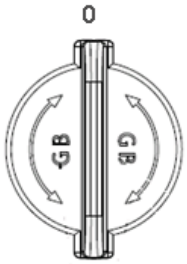

Gas ballast ON (position 1). Use this setting to:

- pump low concentrations of condensable vapours
- decontaminate the pump.

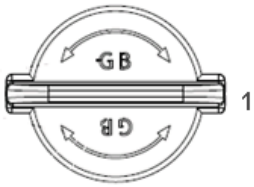

4.7 Start up procedure

Use the procedure below to start up the pump:

1. Ensure that any vacuum system isolation valve is closed (if fitted).
2. With the mains supply to the pump isolated, connect a recommended lead to the electrical socket on the pump (refer to Figure 1).
3. Apply power.
4. Start the pump-system using the appropriate control source, i.e. using the Start button in manual control-mode (refer to Figure 9); the Start/Stop control input (refer to Table 11, pin 3) in parallel control-mode or a Start command in serial control-mode.
5. Open the vacuum system isolation valve (if fitted).

© Edwards Limited 2012. All rights reserved.
Edwards and the Edwards logo are trademarks of Edwards Limited.

4.8 To achieve ultimate vacuum

In order to achieve the best possible vacuum, the pump should be operated with the gas ballast control turned off. However, if the pump, or elements of the vacuum system it is attached to, are new or have been newly fitted, some atmospheric moisture may be present. If atmospheric moisture is present, run the pump with gas ballast on for 20 minutes before turning gas ballast off. If moisture is allowed to remain, the performance of the pump will be impaired.

4.9 To pump condensable vapours

Select gas ballast ON when there is a high proportion of condensable vapours in the process gases. This will assist the vapours to pass through the pump without condensing and keep the pump performance from degrading.

4.10 Shut-Down

Use the procedure below to shut-down the pump:

1. If shutting the pump down prior to a period of storage, remove any process gases by running on a gas-ballast for at least one hour.
2. Close any vacuum system isolation valves to prevent suck-back into the vacuum system (where fitted).
3. Stop the pump-system using the appropriate control source, i.e. using the Stop button in manual control-mode (refer to Figure 9); the Start/Stop control input (refer to Table 11, pin 3) in parallel control-mode or a Stop command in serial control-mode.
4. Vent the nXDS pump system using the gas ballast control or the valve on the inlet.
5. Isolate the Mains supply.

© Edwards Limited 2012. All rights reserved.
Edwards and the Edwards logo are trademarks of Edwards Limited.

This page has been intentionally left blank.

© Edwards Limited 2012. All rights reserved.
Edwards and the Edwards logo are trademarks of Edwards Limited.

5 Maintenance

5.1 Safety information

WARNING

Obey the safety instructions given below and take note of appropriate precautions. If you do not, you can cause injury to people and damage to equipment.

WARNING

Disconnect the pump and other components from the electrical supply so that they cannot be operated accidentally.

WARNING

The pump may be contaminated with the process chemicals that have been pumped during operation. If so, ensure that the pump is decontaminated before maintenance and that you take adequate precautions to protect people from the effects of dangerous substances if contamination has occurred.

WARNING

Do not touch or inhale the thermal breakdown products of fluorinated materials which may be present in the pump if the pump has been heated to 260 °C and above. Fluorinated materials are safe in normal use but can decompose into very dangerous substances (which may include hydrofluoric acid) if they are heated to 260 °C and above. The pump may have overheated if it was misused or if it was in a fire. Health and Safety Data sheets for fluorinated materials used in the pump are available on request; contact your supplier or Edwards.

CAUTION

External surfaces of the pump should be cleaned using warm soapy water. Care must be taken with solvent-based cleaning fluids as they may remove important information from the product labels.

The nXDS pump is designed to require little user maintenance. Observe the following guidelines when carrying out maintenance on you pump:

- Ensure the maintenance is done by a suitably trained supervised technician. Obey your local and national safety requirements
- Ensure the maintenance technician is familiar with the safety procedures which relate to the products processed by the pumping system.
- Check that all the required parts are available and are of the correct type before you start work.
- Disconnect the pump and other components from the electrical supply so that they cannot be operated accidently.
- Allow the pump to cool before you start maintenance work.

© Edwards Limited 2012. All rights reserved.
Edwards and the Edwards logo are trademarks of Edwards Limited.

5.2 Maintenance plan

More frequent maintenance may be required if the pump is used to pump aggressive gases or vapours, such as solvents, organic substances and acids, or if the pump is operated continuously at the higher end of its operating temperature.

Table 13 - Maintenance plan

Operation	Frequency (months)	Service indicator	Section reference
Inspect and clean the inlet strainer	12	No	5.3
Inspect and clean the external fan cover if required	12	No	5.4
Check the pump performance	30	Yes	5.5
Replace the pump bearings	60	Yes	5.6
Replace the pump controller	120	Yes	5.7
Electrical safety check	60	No	5.8

For service indicator codes, refer to Section 5.10.

5.3 Inspect and clean the inlet strainer

Whenever you disconnect the pump from your vacuum system, or on an annual basis, we recommend that you:

- Remove the inlet strainer from the pump inlet (refer to Figure 1) and remove any debris that may have accumulated.
- Inspect the inlet strainer and if necessary, clean it with a cleaning solution suitable for the substances pumped. Refit the inlet strainer before you reconnect the pump to you vacuum system. Refer to Section 3.5.

5.4 Clean the external fan cover

If the fan cover is not kept clean, the air flow over the pump can be restricted and the pump may overheat.

1. Switch off the pump and disconnect it from the electrical supply.
2. Use a dry cloth and a soft brush to remove dirt and deposits from the fan cover.

5.5 Check the pump performance (service indicator)

The service indicator, (flashing ON 1s / OFF 1s) is triggered as a reminder to check the performance of your pump. The service indicator will flash to indicate that a tip-seal change may be required (based on typical tip-seal life). If after checking, the pump is no longer achieving the required performance, we recommend that you carry out a tip-seal replacement (refer to Section 5.10).

If however the pump performance is still within acceptable limits, or is performing to your satisfaction, you may at this point in time wish to delay performing a tip-seal replacement.

If you are operating a preventative maintenance plan, depending upon your particular regime, you may wish to carry out a tip-seal change at this time irrespective of the pump performance.

To reset the service indicator, refer to Section 5.10.

© Edwards Limited 2012. All rights reserved.
Edwards and the Edwards logo are trademarks of Edwards Limited.

5.6 Replace the tip-seals

This instruction is applicable to the nXDS replacement tip seal kit that must be fitted. Refer to Section 7.3.1 for ordering information.

A tip-seal replacement should be carried out to maintain or restore your pumps performance. The frequency for replacing the pump tip-seals is determine by the following factors:

- The pump has reached a service interval. Refer to Sections 5.5 and 5.7.
- The pump is no longer achieving the required performance.

If the pump is no longer achieving the required performance prior to a service interval being reached, we recommend that you first follow the guide lines, refer to Section 5.11.2.

Note: *There may be a running-in period after fitting your new tip-seals. The performance should improve over a period of 24 to 48 hours. If the pump performance does not improve sufficiently after the running-in period, please contact Edwards for advice.*

Refer to the instruction manual supplied with your tip-seal service kit on how to replace the nXDS tip-seal.

5.7 Replace the pump bearings (service indicator)

The service indicator, (flashing ON 3s / OFF 1s) is triggered to indicate that a bearing replacement service interval has been reached. Bearing wear cannot necessarily be detected under normal operating conditions. This service interval is a recommendation that a bearing replacement is required, this is especially useful if you are operating a preventative maintenance plan. Contact Edwards for further details.

Note: *Failure to replace the pump bearings at this time may subsequently lead to damage of the pumping mechanism.*

Note: *A tip-seal change (refer to Section 5.10) must carried out at the same time when performing a bearing replacement.*

To reset the service indicator, refer to Section 5.10.

5.8 Replace the pump controller (service indicator)

The service indicator, (flashing ON 3s / OFF 3s) is triggered to indicate that the pump controller should be replaced. Contact Edwards for further details.

To reset the service indicator, refer to Section 5.10.

5.9 Electrical safety check

Test the earth continuity and the insulation resistance of the pump system in accordance with local regulations for the periodic testing of electrical equipment.

The earth continuity should be less than 0.1Ω and the DC insulation resistance greater than 1.0 MΩ.

If the pump fails any of these tests, you must contact your supplier or Edwards.

© Edwards Limited 2012. All rights reserved.
Edwards and the Edwards logo are trademarks of Edwards Limited.

5.10 Service indicator codes

The nXDS controller incorporates a service indicator (refer to Figure 7). The service indicator will flash a specific code whenever a service interval has been reached. There are three service levels listed in Table 14.

Table 14 - Flashing service codes

Service flash code	Comments	See section
ON 1s / OFF 1s	Pump performance check.	5.5
ON 3s / OFF 1s	Pump bearing service.	5.6
ON 3s / OFF 3s	Pump-Controller service.	5.7

To reset the service indicator, press and hold the standby speed increase and decrease buttons simultaneously for more than 5 seconds.

Note: *Resetting the pump bearing service indicator will also reset the performance check timer, i.e. both counters will be set to zero.*

Note: *Resetting the service indicator will reset the service timer back to zero (refer to Table 13).*

5.11 Fault finding

5.11.1 The pump has failed to start or has stopped

- The electrical supply fuse has blown.
- The ambient temperature is too high.
- The cooling air supply is insufficient or is too hot.
- The process gas is too hot or the throughput is too high.
- The fan is not working or is not connected.
- The motor is faulty.

5.11.2 The pump has failed to achieve the required performance

- Gas ballast may be selected. To close gas ballast, turn the control a quarter turn so that the valve snaps shut. Use this setting to achieve the best possible vacuum. If the pump has been used to pump condensable vapours or is to pump a large chamber that has been exposed to atmospheric air (water vapour), it may be necessary to run for at least an hour on gas ballast.
- If the electrical supply voltage is more than 10% below the lowest voltage specified on the user interface panel, the pump may operate but deliver a degraded vacuum performance.
- There is a leak in your system.
- Your pressure measurement technique or gauge head is unsuitable or gives an incorrect indication of pressure.
- Your vacuum fittings are dirty or damaged.
- The inlet strainer is blocked.
- The connecting pipelines are too long or too small in diameter.
- There is high pressure or a blockage in the exhaust line.
- The pump contains traces of process vapours.

© Edwards Limited 2012. All rights reserved.
Edwards and the Edwards logo are trademarks of Edwards Limited.

- The pump is outside the specified range of operating conditions.
- The tip seals need replacing.
- The pump is in standby mode.

5.11.3 The pump surface temperature is high

- The ambient temperature is too high.
- The cooling air supply is insufficient or is too hot.
- The process gas is too hot or the maximum continuous operating pressure has been exceeded.

5.11.4 Alarm indicator codes

Whenever a fail condition becomes active the red alarm indicator shows a flashing sequence. If the error light is on continuously this indicates a problem has been found with the embedded software. In this case, try cycling the power. If cycling the power does not clear the indication, a software download may be required. In this situation, contact your supplier or Edwards. If the alarm indicator is flashing, identify the error flash code and consult Table 15.

There is a sufficient off period between each subsequent cycle repetition to clearly mark the start of a new flash sequence. The duration of a long flash (L) is equal to 3 times the duration of a short flash (0.5 s).

Table 15 - Flashing error codes

Error flash position	Error flash sequence	Comment	Actions
0	ssssss	Overload timeout.	Check whether the pump is not running under constant high pressure or the inlet or outlet is not blocked.
1	Lsssss	Controller software error.	Cycle the power to the pump and see whether the error code appears again. If it does, contact your supplier or Edwards.
2	sLssss	Controller failed internal configuration and calibration operation.	Cycle the power to the pump and see whether the error code appears again. If it does, contact your supplier or Edwards.
3	ssLsss	Acceleration timeout.	Check whether the pump is not running under constant high pressure or the inlet or outlet is not blocked.
4	sssLss	Over-current trip activated, or other hardware fault.	Cycle the power to the pump and see whether the error code appears again. If it does, contact your supplier or Edwards.
5	ssssLs	Self test fault.	Cycle the power to the pump and see whether the error code appears again. If it does, contact your supplier or Edwards.
6	sssssL	Serial Control Mode Interlock.	Re-activate serial enable and send a serial command to clear the error code.

© Edwards Limited 2012. All rights reserved.
Edwards and the Edwards logo are trademarks of Edwards Limited.

This page has been intentionally left blank.

© Edwards Limited 2012. All rights reserved.
Edwards and the Edwards logo are trademarks of Edwards Limited.

6 Storage and disposal

6.1 Storage

Use the following procedure to store the pump:

1. Shut down the pump as described in Section 4.10.
2. Disconnect the pump from the electrical supply.
3. Place and secure protective covers over the inlet and outlet ports.
4. Store the pump in cool, dry conditions until required for use. When required, prepare and install the pump as described in Section 3.

6.2 Disposal

Dispose of the pump and any components from it safely in accordance with all local and national safety and environmental requirements.

Particular care must be taken with components which have been contaminated with dangerous process substances.

Do not incinerate fluoroelastomer seals and O-rings.

© Edwards Limited 2012. All rights reserved.
Edwards and the Edwards logo are trademarks of Edwards Limited.

This page has been intentionally left blank.

© Edwards Limited 2012. All rights reserved.
Edwards and the Edwards logo are trademarks of Edwards Limited.

7 Spares and accessories

7.1 Introduction

Edwards products, spares & accessories are available from Edwards companies in Belgium, Brazil, Canada, France, Germany, Hong Kong, Italy, Japan, Korea, Switzerland, UK, USA and a worldwide network of distributors. The majority of these centres employ Service Engineers who have undergone comprehensive Edwards training courses.

Order spare parts and accessories from your nearest Edwards company or distributor. When you order, state for each part required:

- Model and item number of your equipment
- Serial number
- Item number and description of part.

7.2 Accessories

Figure 13 - nXDS accessories

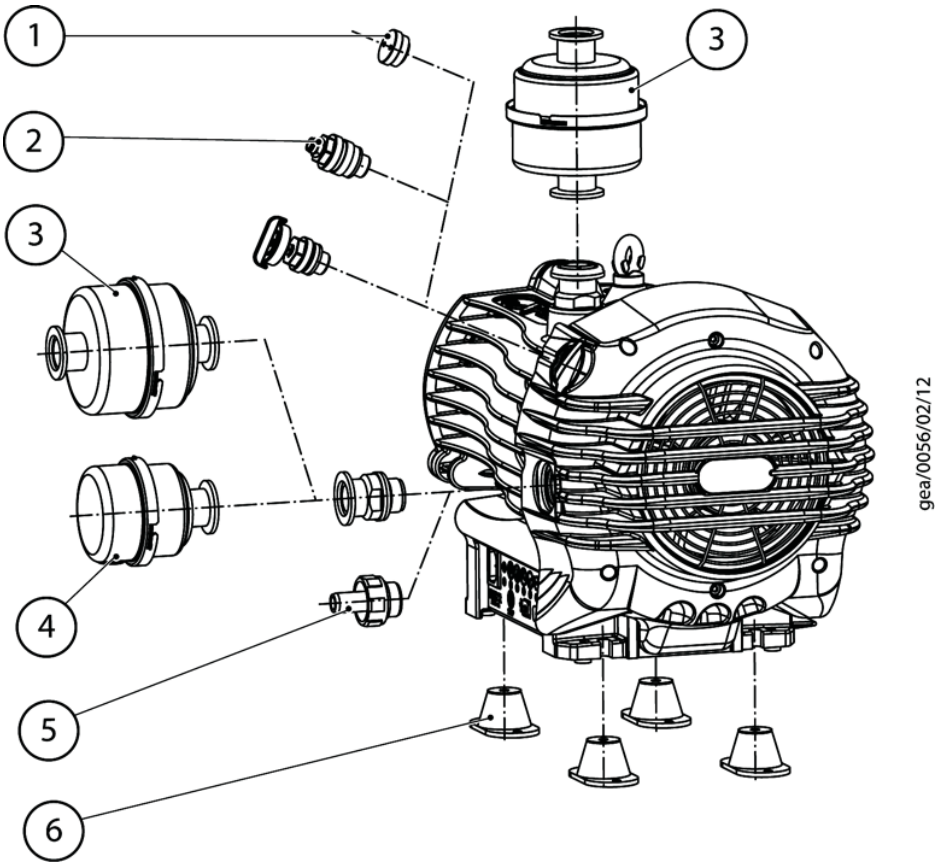

1. Gas ballast adaptor blank
2. Gas ballast adaptor
3. Inlet/exhaust filter
4. Silencer
5. Exhaust nozzle
6. Vibration isolators

© Edwards Limited 2012. All rights reserved.
Edwards and the Edwards logo are trademarks of Edwards Limited.

7.2.1 Silencer

A silencer is available for the nXDS pump. Refer to Section 3.5 for guidance on its use.

Table 16 - Silencer

Product description	Ordering information
Silencer NW25	A505-97-000

7.2.2 Gas ballast adaptor

A gas ballast adaptor may be fitted in place of the gas ballast control on the pump. The adaptor allows you to connect a controlled supply of inert gas to the pump.

Table 17 - Gas ballast adaptor

Product description	Ordering information
Gas ballast adaptor	A735-01-809

7.2.3 Gas ballast adaptor blank

This adaptor kit allows you to convert a standard nXDS pump into an nXDS-R version. The gas ballast control is replaced with a blank adaptor so that the gas ballast cannot be accidently opened. This feature is useful for applications such as rare gas recirculation or gas recovery. Another advantage is improved leak tightness at this location.

Table 18 - Gas ballast blank adaptor

Product description	Ordering information
Gas ballast blank adaptor	A735-01-806

7.2.4 Vibration isolators

Fit vibration isolators to the nXDS pump if you need to reduce the transmitted vibration from the pump to a structure, such as a frame or a system.

Table 19 - Vibration isolators

Product description	Ordering information
Vibration isolators (pack of 4)	A248-01-404

7.2.5 Inlet/exhaust filter

The inlet dust filter has two functions. It can be connected inline between the pump inlet and your chamber outlet connection to prevent dust from migrating into your system. Alternatively, it can be connected inline between the pump exhaust and your exhaust extraction system. The filter is supplied ready to use with a 5 µm element.

Note: *If connecting the exhaust filter onto the pump outlet, an NW25 / hose nozzle, C105-14-328 is available to connect onto the outlet of the dust filter.*

Table 20 - Inlet/exhaust filter

Product description	Ordering information
Inlet/exhaust filter NW25/NW25	A505-97-805

© Edwards Limited 2012. All rights reserved.
Edwards and the Edwards logo are trademarks of Edwards Limited.

7.2.6 Exhaust nozzle

The exhaust nozzle screws into the outlet flange. Use the exhaust nozzle to connect the pump to the 12 mm internal diameter plastic hose.

Table 21 - Exhaust nozzle

Product description	Ordering information
Exhaust nozzle	A505-09-000

7.2.7 Chemical resistance conversion kit

This adaptor kit allows you to convert a standard nXDS pump into an nXDS-C version. This conversion may be necessary if you wish to use your pump on applications involving corrosive substances. For more information, contact Edwards.

Table 22 - Chemical resistance conversion kit

Product description	Ordering information
Chemical adaptor kit for nXDS 6i, 10i or 15i	A735-01-807
Chemical adaptor kit for nXDS20i	A735-01-808

7.2.8 Electrical cables

Refer to Table 23. The following electrical cables are available as accessories and should be used to connect the nXDS pump to your electrical supply.

Table 23 - Electrical cables

Product description	Ordering information
Lead Assembly, 10 A, C13, UK	A505-05-000
Lead Assembly, 10 A, C13, Europe	A505-06-000
Lead Assembly, 10 A, C13, USA	A505-07-000
Lead Assembly, 10 A, C13, No Plug	A505-08-000

7.2.9 Pump-to-controller cable

Use the control cable to control the nXDS pump using an Edwards (TIC) Turbo Instrument Controller or TIC Turbo Controller, or a (TAG) Active Gauge controller.

Table 24 - Pump-to-controller cables

Product description	Ordering information
1 m cable	D395-00-835
2 m cable	D395-00-836
5 m cable	D395-00-837

© Edwards Limited 2012. All rights reserved.
Edwards and the Edwards logo are trademarks of Edwards Limited.

7.3 Spares

7.3.1 Tip-seal kit

Used to maintain or restore the performance of your pump. Refer to Section 5.10.

Table 25 - Tip-seal kit

Product description	Ordering information
Tip-seal kit	A735-01-801

7.3.2 Cooling fan

Used to replace the cooling fan located inside the nXDS fan cowl. Refer to Figure 1, item 4.

Table 26 - Cooling fan

Product description	Ordering information
Cooling fan	A735-01-707

7.3.3 Gas ballast knob

Replacement gas ballast control knob attached to the gas ballast control. Refer to Figure 1, item 3.

Table 27 - Gas ballast knob

Product description	Ordering information
Gas ballast control knob	A735-01-059

7.3.4 Silencer spares kit

Replacement spares for the nXDS silencer A505-97-000.

Table 28 - Silencer spares kit

Product description	Ordering information
Silencer spares kit	A505-97-800

7.3.5 Inlet/exhaust filter spares

Replacement elements for the inlet/exhaust filter A505-97-805.

Table 29 - Inlet/exhaust filter spares

Product description	Ordering information
5 micron element	A505-97-802
1 micron element	A505-97-803

© Edwards Limited 2012. All rights reserved.
Edwards and the Edwards logo are trademarks of Edwards Limited.

7.3.6 Bearing replacement kit

Used when the pump has reached a long run service period. Refer to Section 5.7.

Table 30 - Bearing replacement kit

Product description	Ordering information
Bearing replacement kit	A735-01-802

© Edwards Limited 2012. All rights reserved.
Edwards and the Edwards logo are trademarks of Edwards Limited.

This page has been intentionally left blank.

© Edwards Limited 2012. All rights reserved.
Edwards and the Edwards logo are trademarks of Edwards Limited.